SERIES **CHS 6 TS** — TRANSLATING SCREW

SERIES CHS 6 TS - 15000 daN · TPN 60x9

SCREW JACK MODEL		CHS 6
LOAD	daN (Kg)	15000
TPN SCREW	DIAMETER mm PITCH mm	60 9
GEAR RATIOS	FAST SPEED NORMAL SPEED SLOW SPEED	5:1 10:1 30:1
STROKE FOR INPUT REV.	FAST SPEED NORMAL SPEED SLOW SPEED	1,80 0,90 0,30
EFFICIENCY	FAST SPEED NORMAL SPEED SLOW SPEED	19,3% 18,0% 16,5%
JACK WEIGHT (Kg)		29
SCREW WEIGHT TPN X 100 mm (Kg)		2
CASE MATERIAL		G25
GREASE QTY (Kg)		1
GREASE TYPE		AGIP GR MU EP2
OPERATING TEMPERATURE		-5° C +80° C

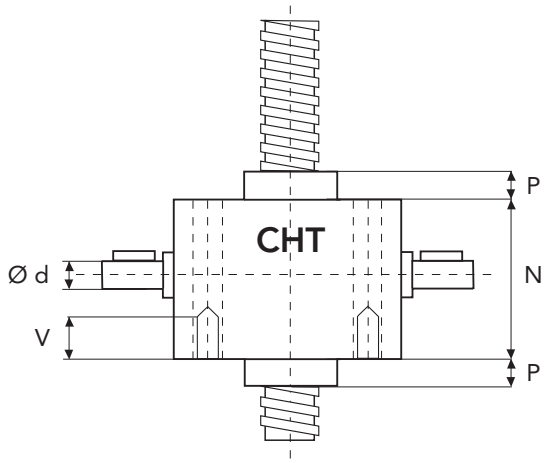

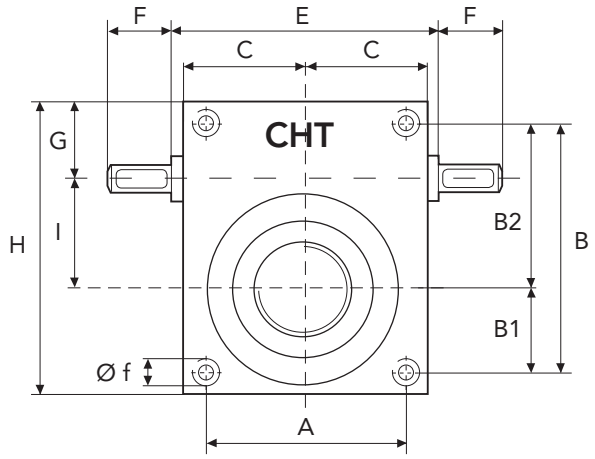

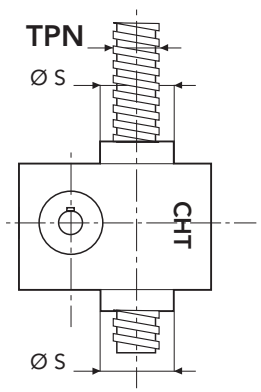

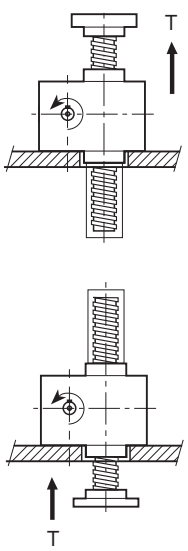

	A	B	B1	B2	C	E	F	G	H
CHS6	134	175	60	115	87,5	-	47,5	68	216
	I	N	P	P1	V	Ø d	Ø f	Ø s	TPN
CHS6	70	150	40	25	40	25	M20	90	60x9

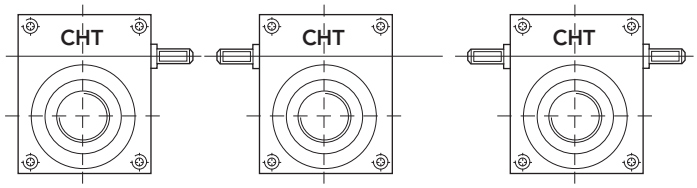

DX SX DE

SERIES **CHS 6 RS** — VITE ROTANTE

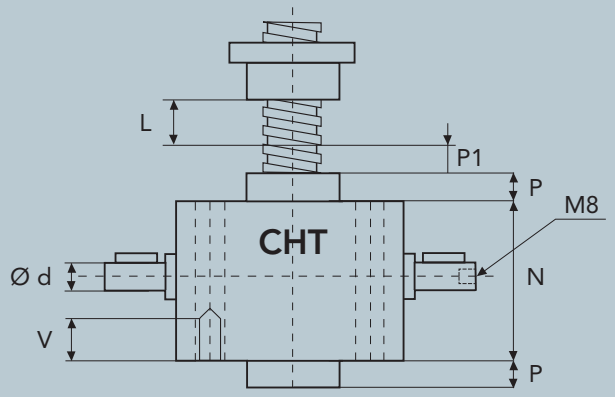

L = CORSA

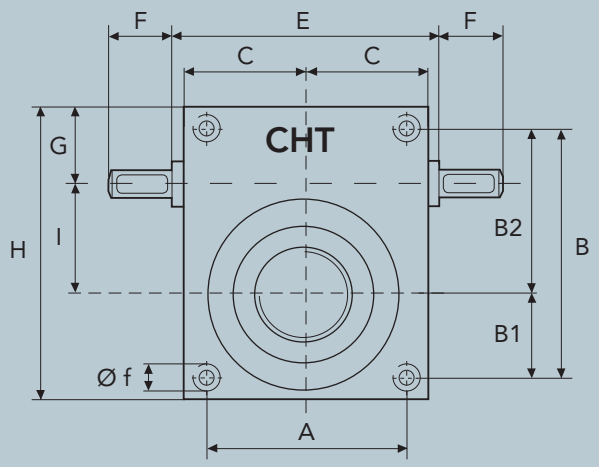

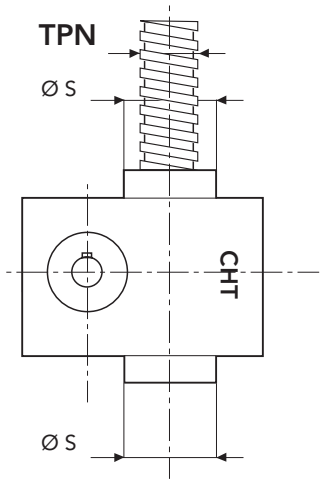

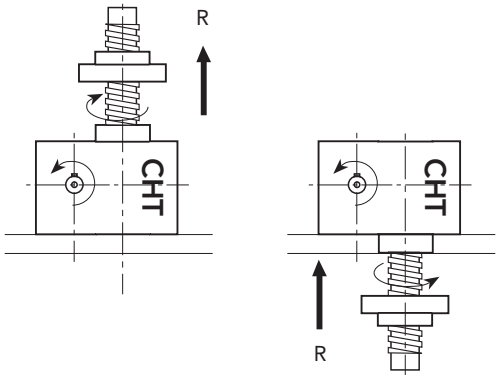

SERIES CHS 6 TS - 15000 daN · TPN 60x9

BRONZE NUT

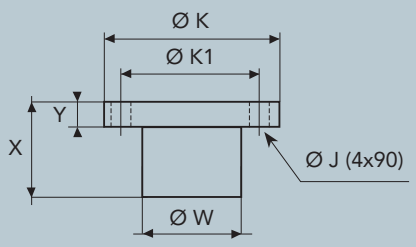

	X	Y	Ø W	Ø K	Ø K1	Ø J
CHS6	120	25	80	110	92	10,5

MOTORS ADAPTORS FLANGES

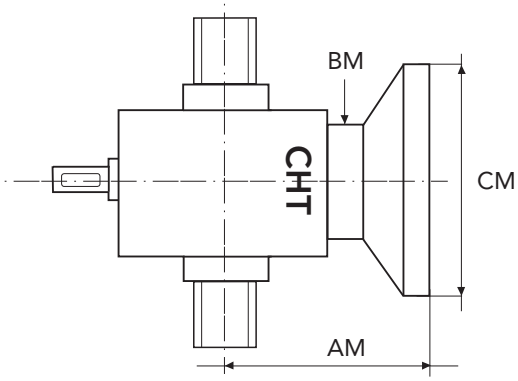

MOTOR	FLANGE TYPE	CM	AM	BM
GR. 80	B5 B14	200 120	140	108
GR. 90	B5 B14	200 140		
GR. 100/112	B5 B14	250 160		

CONFIGURATION

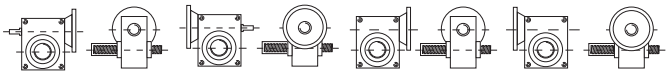

M1 M2 M3 M4

SCREW JACK PERFORMANCE **CHS 6**

SCREW-JACKS WITH BALL SCREWS FOR TRANSLATING SCREW BY INTEGRATED NUT

Consult our technical DPT

load daN			15000		7500		5000		2000	
ratio	lifting speed mm	input speed	Pn Kw	Mt daNm	Pn Kw	Mt daNm	Pn Kw	Mt daNm	Pn Kw	Mt daNm
5	2700	1500	35,17	22,39	17,59	11,20	11,72	7,46	4,69	2,99
	1800	1000	23,45	22,39	11,72	11,20	7,82	7,46	3,13	2,99
	1350	750	17,59	22,39	8,79	11,20	5,86	7,46	2,34	2,99
	90	50	1,17	22,39	0,59	11,20	0,39	7,46	0,16	2,99

load daN			15000		7500		5000		2000	
ratio	lifting speed mm	input speed	Pn Kw	Mt daNm	Pn Kw	Mt daNm	Pn Kw	Mt daNm	Pn Kw	Mt daNm
10	1350	1500	18,76	11,94	9,38	5,97	6,25	3,98	2,50	1,59
	900	1000	12,51	11,94	6,25	5,97	4,17	3,98	1,67	1,59
	675	750	9,38	11,94	4,69	5,97	3,13	3,98	1,25	1,59
	45	50	0,63	11,94	0,31	5,97	0,21	3,98	0,07	1,59

load daN			15000		7500		5000		2000	
ratio	lifting speed mm	input speed	Pn Kw	Mt daNm	Pn Kw	Mt daNm	Pn Kw	Mt daNm	Pn Kw	Mt daNm
30	450	1500	6,70	4,27	3,35	2,13	2,23	1,42	0,89	0,57
	300	1000	4,47	4,27	2,23	2,13	1,49	1,42	0,60	0,57
	225	750	3,35	4,27	1,67	2,13	1,12	1,42	0,45	0,57
	15	50	0,22	4,27	0,11	2,13	0,07	1,42	0,07	0,57

CHS 6

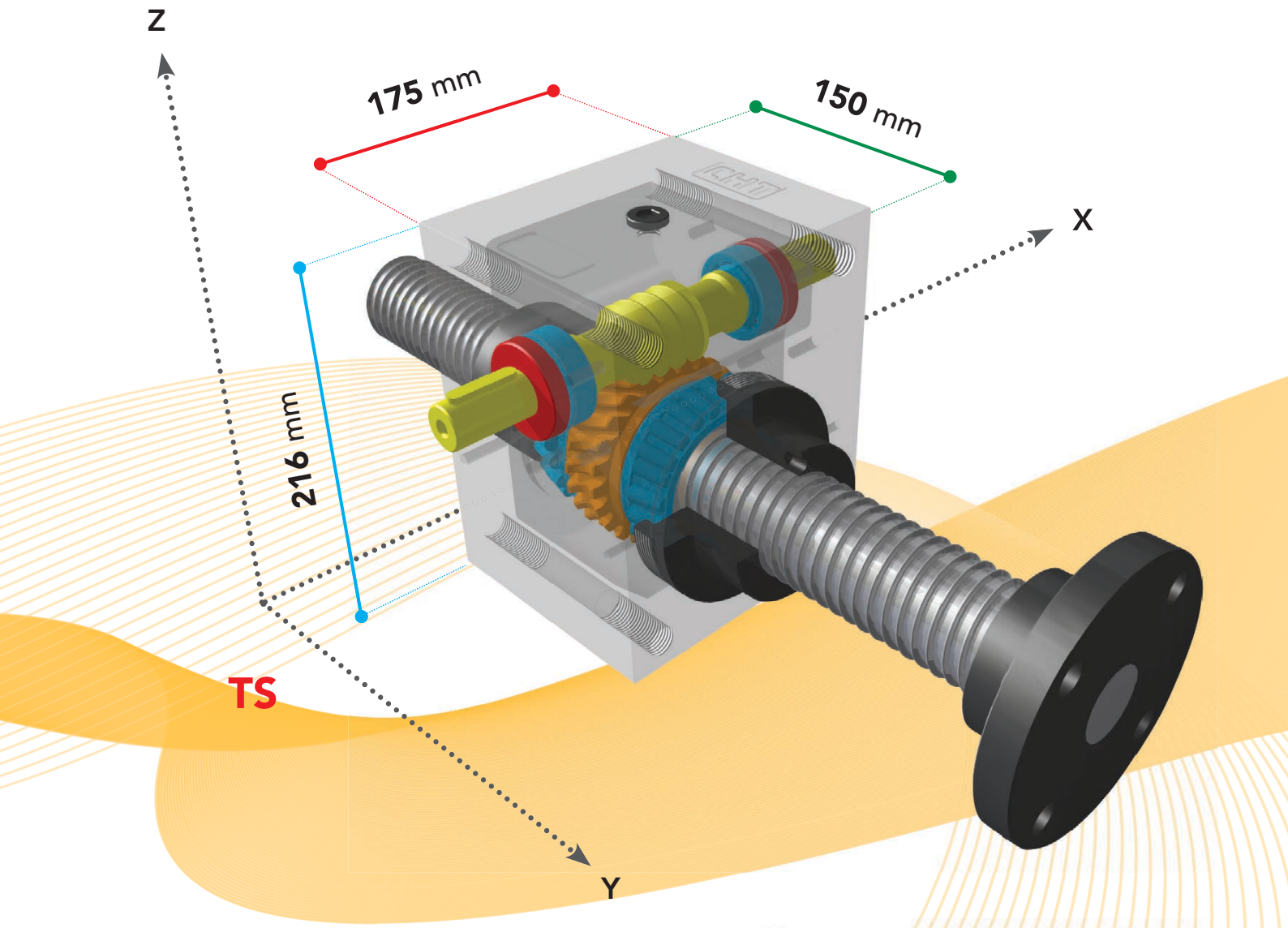

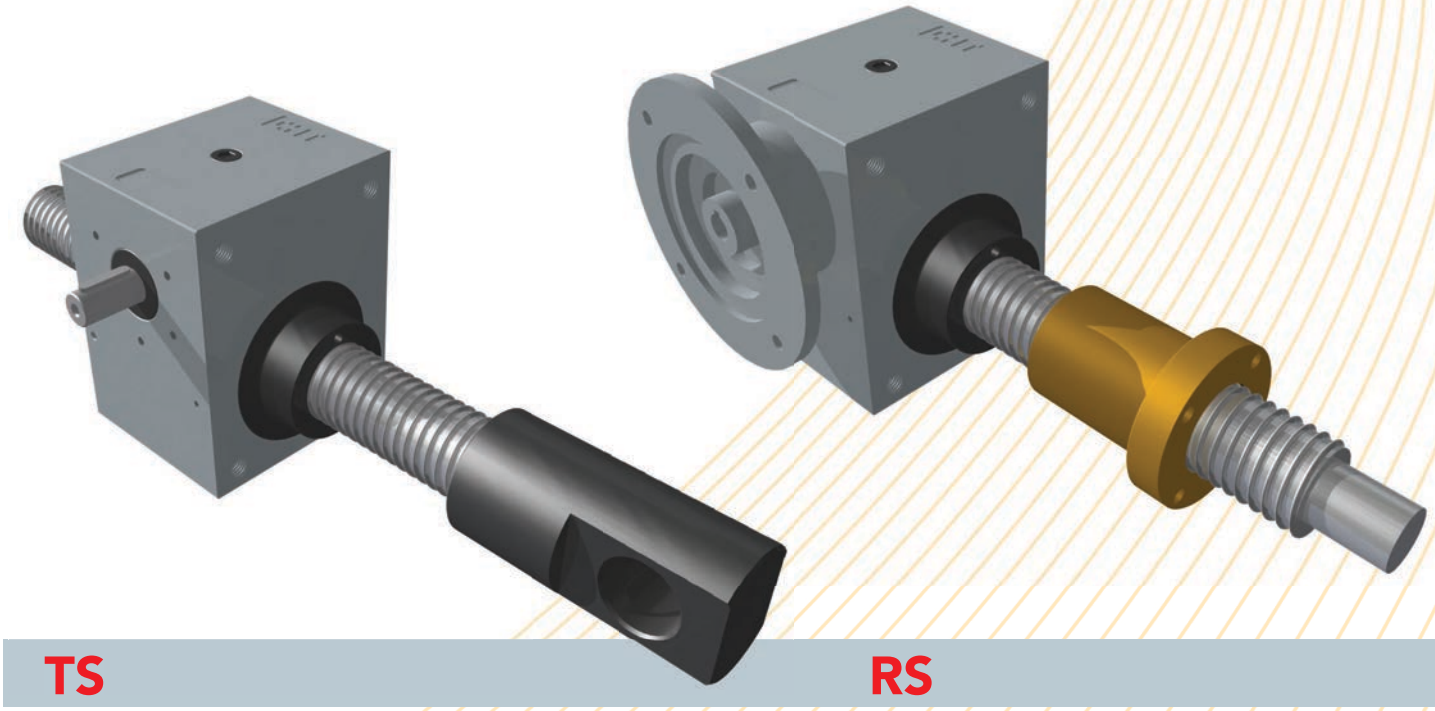

TS RS