Electric Drives and Controls | Hydraulics | Linear Motion and Assembly Technologies | Pneumatics | Service

Rexroth
Bosch Group

Ball Rail Tables TKL

with Ball Rail Systems and Linear Motor

R310EN 2531 (2010.05)

The Drive & Control Company

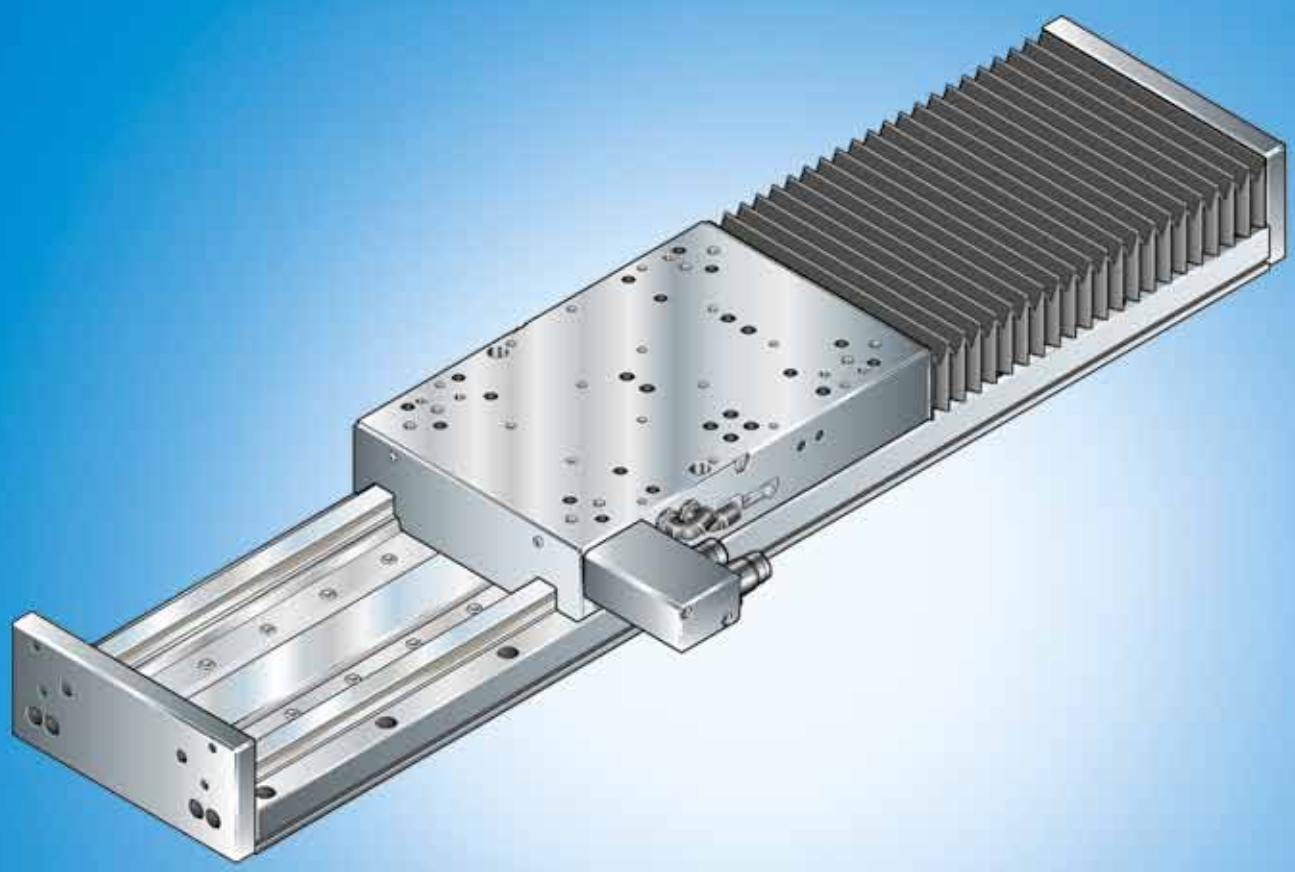

Bosch Rexroth AG

Linear Motion and Assembly Technologies

Ball Rail Systems
Roller Rail Systems
Linear Bushings and Shafts

Ball Screw Drives
Linear Motion Systems

Basic Mechanical Elements
Manual Production Systems
Transfer Systems

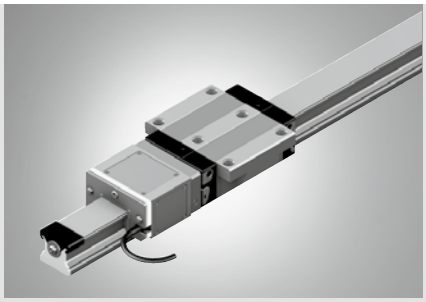
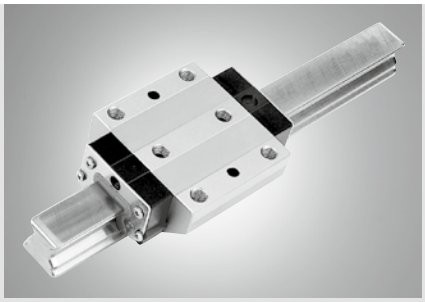


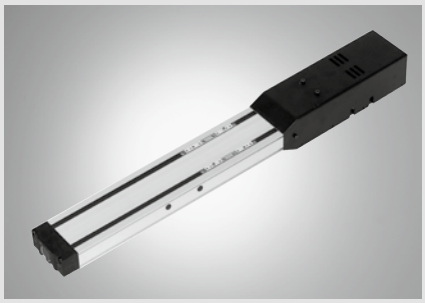
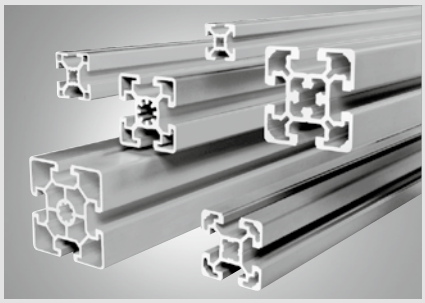

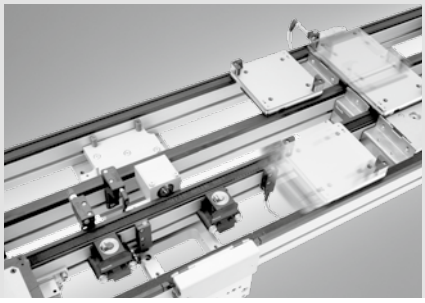
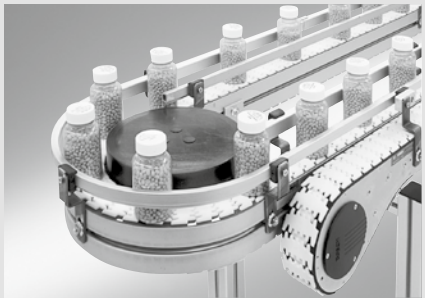

www.boschrexroth.com/dcl

Ball Rail Tables TKL

Product Description

Outstanding features

Ball Rail Tables TKL will help you solve your linear motion problems rapidly and cost-effectively for a wide variety of different applications – from simple single-axis systems to multi-axis configurations.

The well-matched combination of synchronous linear motor, ball rail system, position measuring system and carriage substantially reduces the design complexity of the mechanical structures usually needed for linear motion.

Since they require no rotary to linear motion conversion mechanisms, Ball Rail Tables TKL offer you all the advantages of backlash-free drives.

Ball Rail Tables TKL are particularly suitable for applications that simultaneously call for
- high speed,
- high acceleration, and
- extremely good positioning.

They can easily master positioning tasks at high approach speeds or involving a rapid succession of short-stroke movements with high acceleration, while coping with even the most demanding positioning accuracy requirements.

Controllers and servo amplifiers with SERCOS interface, field bus, analog or positioning interface are available for optimal control of the Ball Rail Tables TKL.

Further highlights

- Internals protected by high-quality, welded, oil- and moisture-resistant high-speed bellows
- High travel speeds and high acceleration rates thanks to excellent dynamics of the linear motor
- High load capacity assured by the use of long runner blocks
- High positioning accuracy thanks to integrated measuring system or glass scale
- Easy maintenance of ball rail system via one central lubrication point
- Lube ports provided on both carriage sides
- Zero maintenance linear motor
- Clamping unit as an option
- High Precision Ball Runner Blocks

Application areas:

- Transfer lines
- Machining centers
- Handling systems
- Textile machines
- Packaging machines
- Testing

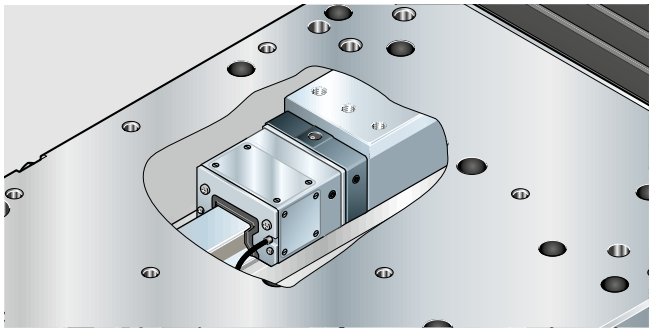

Integrated Position Measuring System
- No additional space requirement for measuring system

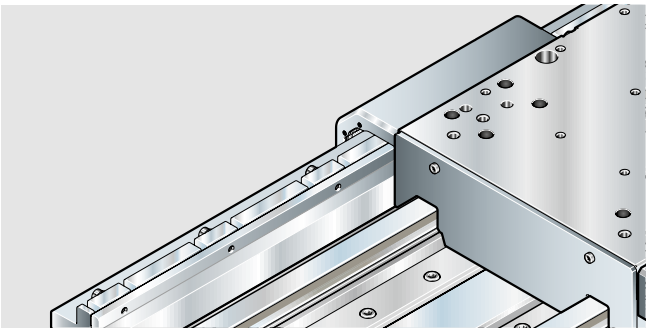

Glass scale
- Freely accessible from the outside

Ball Rail Tables TKL

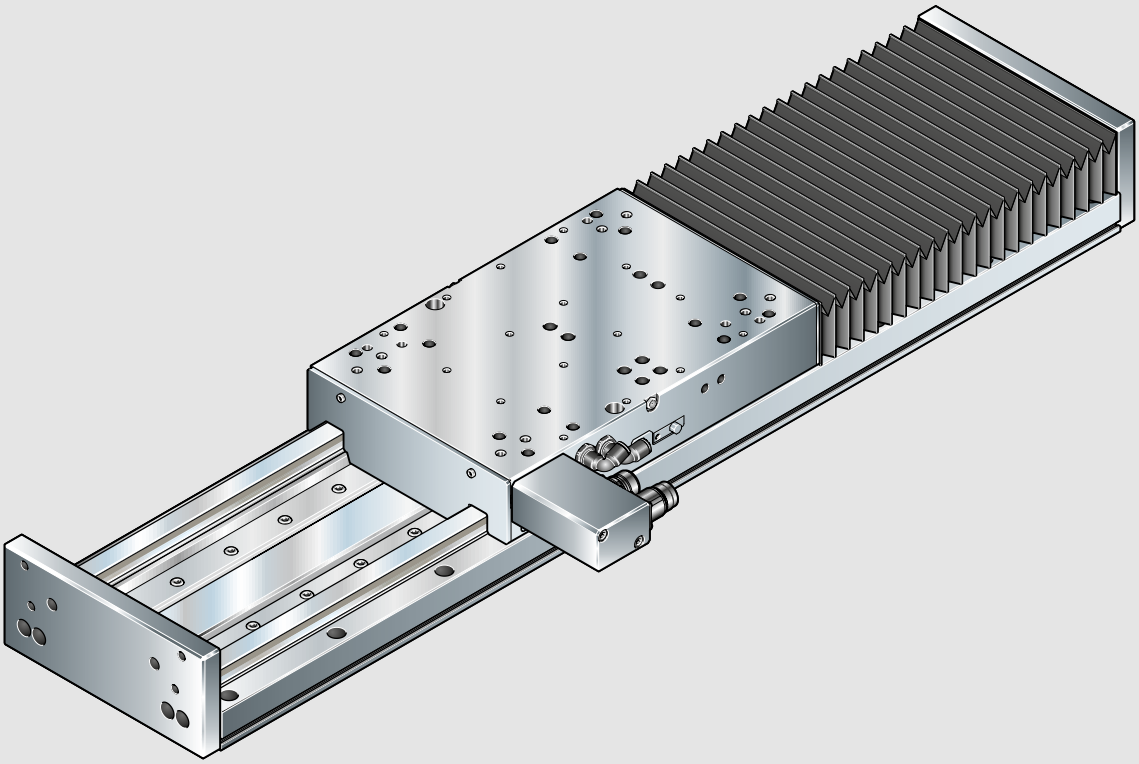

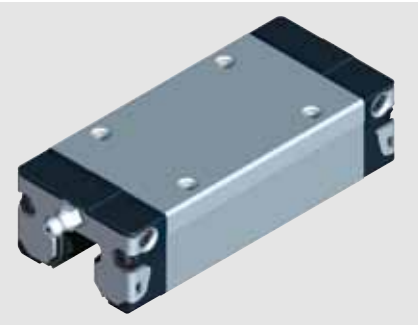

Ball Runner Blocks
- as High Precision Ball Runner Blocks made of steel
- as High-Speed Ball Runner Blocks with ceramic balls for high travel speed

Direct comparison of the travel accuracy of two ball runner blocks
The graph clearly shows that the short-wave inaccuracies (dashed line) can be very significantly reduced by the new, innovative design of the entry zone (continuous line).

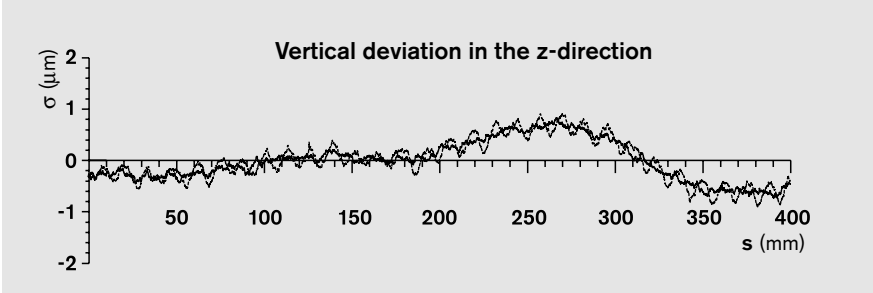

Product Description

The Drive Unit

Basic principle

The key drive components of Ball Rail Tables TKL are the thrust block (primary part) and the permanently magnetized thrust rod (secondary part). Two Ball Rail Systems support and guide the primary part and its load. The thrust block and the thrust rod do not come into contact with each other. The weight of the payload is transmitted to the Ball Rail System only.
Unlike rotary drive systems, the linear motor comprises no moving parts and is consequently wear and maintenance free.
It is therefore ideal for 24-hour operation. It also eliminates the need for additional rotary to linear conversion mechanisms.
Because there is no backlash, positional repeatability is outstanding and is maintained for life.

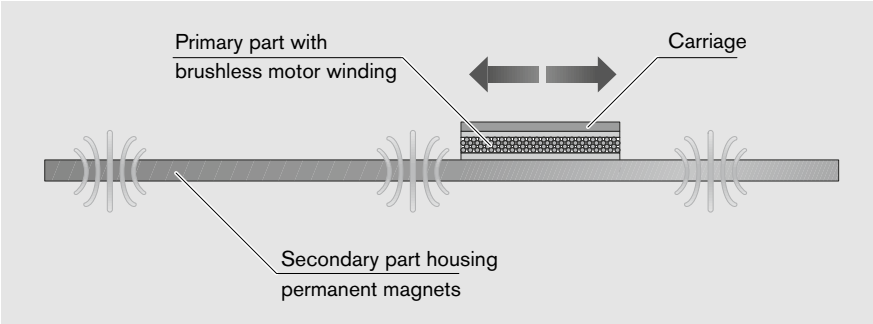

The Advantages

- **Easy to install and use**: Fully integrated load bearing system, providing a ready-to-install solution for the design engineer. No need to source individual components.
- **High speeds and high acceleration:** Synchronous direct linear drive. High K_V factor and high dynamics.
- **Precise motion and high dynamic response for life:** Thrust generated directly at the payload. No need for rotary to linear conversion mechanisms, no gears and thus no backlash. Linear high-resolution position sensing system.
- **Permits very high load cycle rates:** Excellent heat dissipation thanks to liquid cooling of primary part.
- **Easy maintenance:** No internal moving parts, no wear and no motor maintenance. Central lube ports for maintenance of runner blocks (on both sides of carriage).

Safety Notes

⚠ **Warning:** Danger for people with pacemakers! The drive unit generates strong magnetic fields (even when switched off!) which can under certain circumstances affect the functioning of pacemakers. This could cause health problems. We therefore advise people with pacemakers to keep clear of the drive unit. We also recommend to mark hazard zones with a warning sign to DIN 40023.

⚠ **Caution:** For vertical configurations, please consult us!

⚠ **Caution:** Risk of injury or damage to the drive unit through improper handling or non-specialist installation!
- Mounting or dismounting only by specialists and using appropriate tools. Please note that the use of ferromagnetic materials can give rise to extremely high forces of attraction. Wrong handling could result in crushed hands or limbs.
- Provide additional external hydraulic shock absorbers in the end positions.
- Encapsulate the drive unit to prevent injuries.

⚠ **Caution:** Interference with on-board electronic systems in transportation (e.g., aircraft) due to strong magnetic fields! It is therefore vital to observe the relevant rules and regulations when transporting drive units.

⚠ **Caution:** On powering up, the system will respond with an initial uncontrolled movement of up to 37.5 mm before performing its reference cycle of 80 mm max.

The Control System

Basic principle

Rexroth offers matching servo amplifiers for the Ball Rail Table TKL (please refer to the catalog “IndraDrive for Linear Motion Systems”). They power the linear motor as well as constituting the interface to a master control system.
A position measuring system integrated in the mechanical structure signals the carriage’s actual position to the control system position loop.

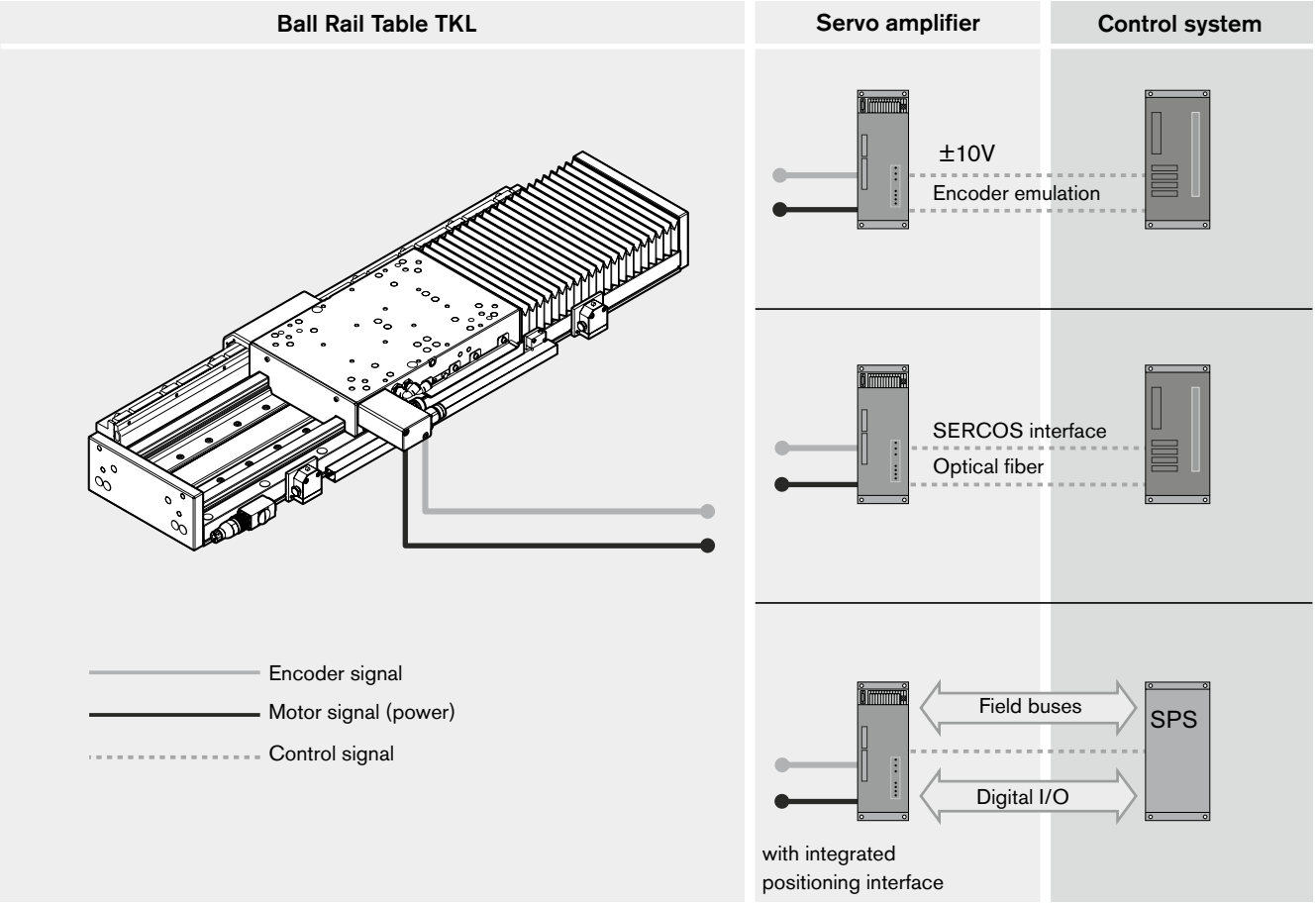

The Advantages

Various command signal interfaces offered

- Control via analog +/–10 V signal (velocity command signal)
- Control via SERCOS interface
- Control via positioning interface
  (integrated in the servo amplifier)
- Control via field buses

Complete with integrated position measuring system

- Ready for connection to the linear measuring inputs in your servo amplifier or control unit.

Matching servo amplifier

- Designed for easy connection and installation. Diagnostic interface as standard.
- Motor-controller combination from the same source.

Product Overview

Type Designation, Size

The Ball Rail Tables are designated according to type and size.

	Type			Size
Ball Rail Table (example) =	T	K	L	30-325

System = Ball Rail Table **(T)**

Guideway = Ball Rail System **(K)**

Drive unit = Linear motor **(L)**

Dimensions of guideway =

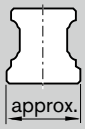

Frame size =

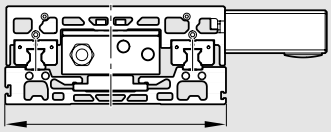

	Type	Guideway	Drive unit	Ball Rail Table	
Ball Rail Tables	TKL	 Ball Rail Systems	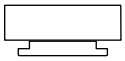 Linear motor	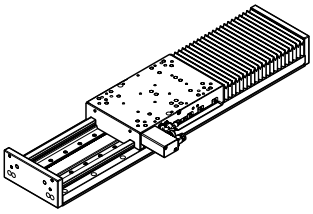	

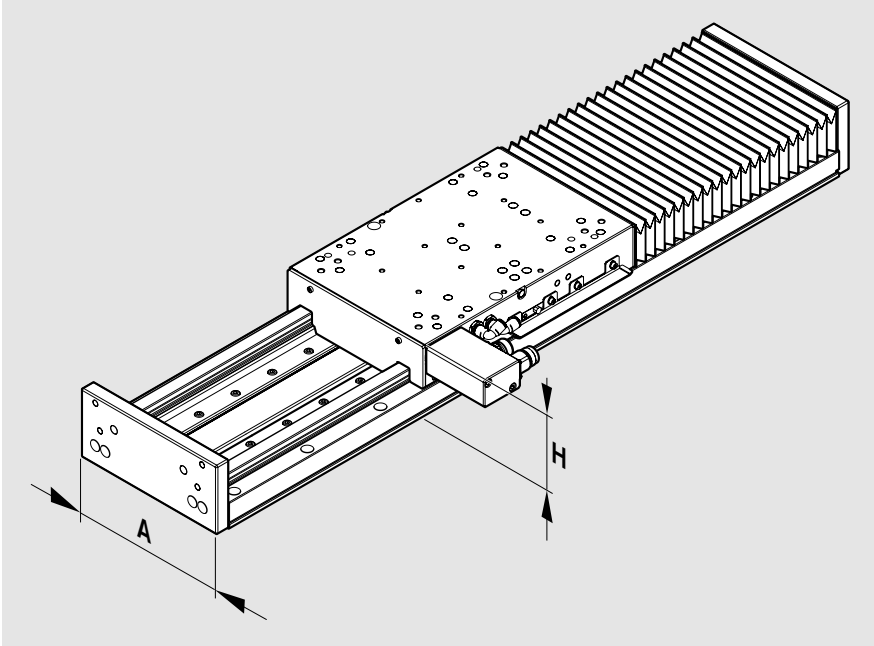

Ball Rail Table	Dimensions A x H (mm)	L_{max} (mm)	Dyn. load capacity C_X, C_Y (N)[1) 2)]
TKL 20 - 225	225 x 100	3940	75000
TKL 25 - 275	275 x 110	3940	89300
TKL 30 - 325	325 x 120	3940	123000 (163000)[3)]

1) Take maximum loads into account.
2) Values for High Precision Ball Runner Blocks (note the reduced values for High Speed Ball Runner Blocks).
3) Only for version with primary part C or table length 775 mm.

Structure, Mounting

1 End plate
2 Guide rail with integrated measuring system
3 Guide rail
4 Linear motor secondary part
5 Linear motor primary part
6 Ball Runner Blocks (4 or 6 in total)
7 Probe of integrated measuring system
8 Carriage (aluminum)
9 Polyurethane protective bellows
10 Rubber buffer
11 Base plate (aluminum)
12 Plug mount for motor and linear measuring system

Attachments:
13 Clamping unit
14 Glass scale
15 Socket/plug
16 Mechanical switch (with mounting accessories)
17 Cable duct (aluminum alloy)
18 Switching cam
19 Proximity switch (with mounting accessories)

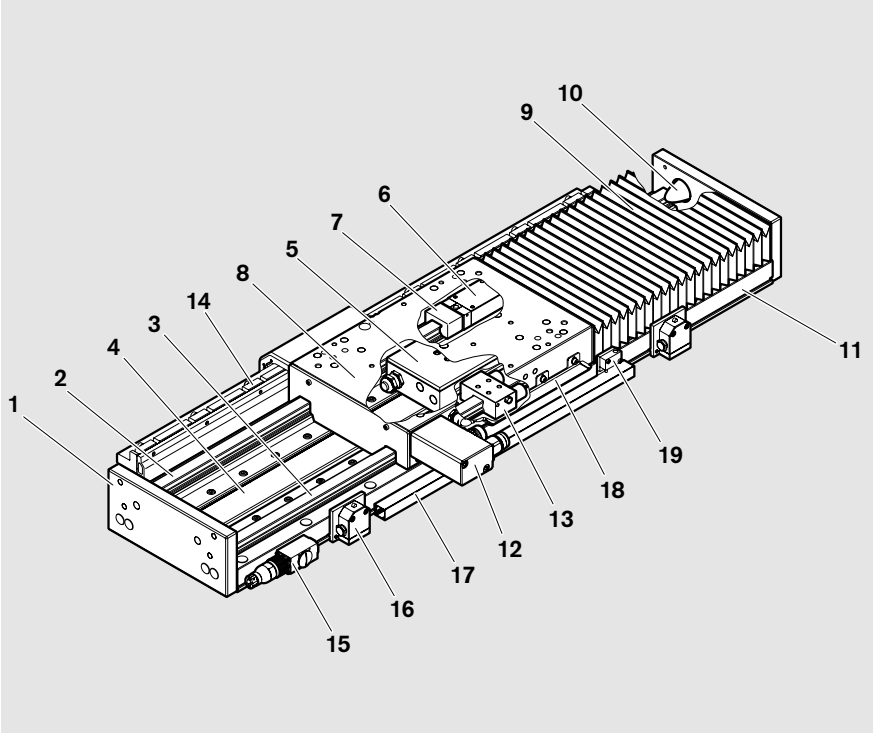

General notes on mounting

Ball Rail Tables TKL are mounted from above.
Mounting hole plugs are included with the unit.
For connection dimensions, see the relevant dimension drawings.

1 Base plate
2 Mounting hold plug

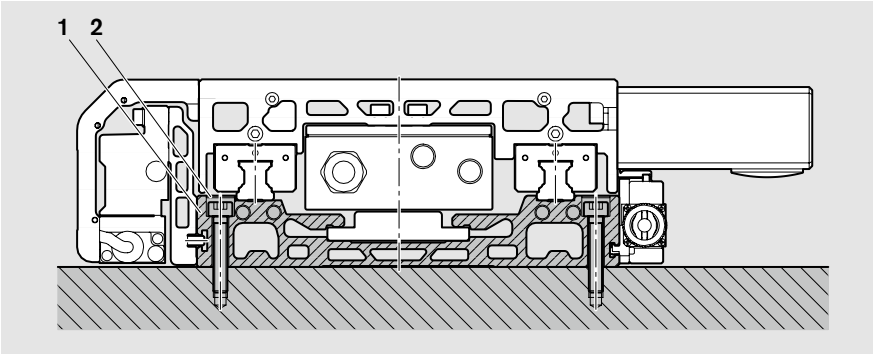

Accuracy

All accuracy data apply to the unit when screwed down and assume an ideal flat mounting base surface. Irregularities in the mounting base surface are not taken into account in the values given below.

Accuracy P1

Measured in the center of the carriage

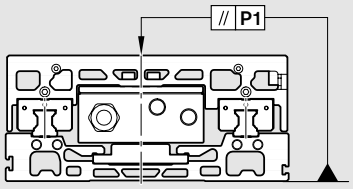

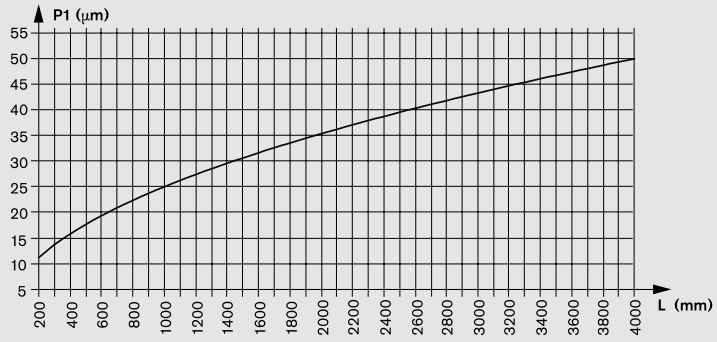

Accuracy P2

Measured in the center of the carriage

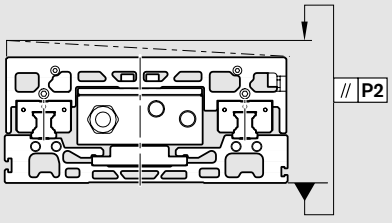

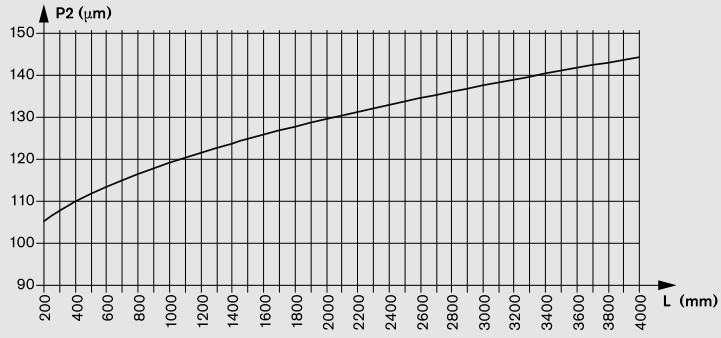

Accuracy P4

Measured in the center of the carriage

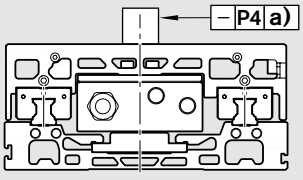

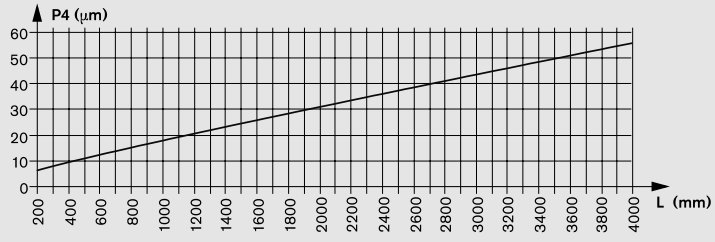

a) lengthwise

Technical Data

Size	Motor	Primary part	Motor winding	Peak thrust 1) F_{max} (N)	Continuous thrust F_{dN} (N)	Maximum velocity at F_{max} 2) v_{Fmax} (m/s)	Rated velocity 2) at F_{dN} v_N (m/s)	Motor attractive force 3) F_{ATT} (N)	Carriage length L_{ca} (mm)	Dimen-sion Z_1 (mm)
TKL20-225	MLP040	A	300	600	190	4,1	6,6	1200	340	52,1
		B	250	900	290	4,1	6,6	1700	400	
TKL25-275	MLP070	A	300	1800	500	4,1	6,6	2900	395	60,4
		B	250	2200	750	4,1	6,6	3750	465	
TKL30-325	MLP100	A	190	3500	1000	3,0	4,8	5400	475	68,5
		B	250	5100	1600	4,1	5,8	8000	625	
		C	190	7150	2310	3,1	4,8	10400	775	

All of the data given above refer to the following conditions:
- Motor winding temperature 135 °C
- Cooling medium: water, inlet temperature 30 °C

Motor data: The values determined are effective values according to IEC 60034-1, unless stated otherwise.
Reference value 540 V_{DC}

1) The achievable peak thrust depends on the drive controller used.
2) The achievable velocities depend on the supply voltage. At velocities above 300 m/min (≙ 5 m/s) high-speed runner blocks are required.
3) Between the primary and secondary part at rated air gap, primary part de-energized.

Acceptable loads
(recommended from experience)

With respect to the desired service life, loads up to about 20 % of the characteristic dynamic values (**C, M_t, M_L**) have proved acceptable.
For side loads above 8 % C, it should be remembered when considering the service life that only one guide rail has lateral retention.

Higher side loads are only taken up by the runner blocks on the fixed rail.
At the same time, the following may not be exceeded:
- maximum permissible loads
- maximum permissible travel speed
- maximum permissible motor data

Note on dynamic load capacities and moments

Determination of the dynamic load capacities and moments is based on a travel life of 100,000 m per ISO 14728-1. Often only 50,000 m are actually stipulated.

For comparison: Multiply values **C**, **M_t** and **M_L** from the table by 1.26.

Weight calculation

TKL 20-225:
$m_s = 0.027 \cdot L + 4.3 + m_{ca}$

TKL 25-275:
$m_s = 0.038 \cdot L + 6.3 + m_{ca}$

TKL 30-325:
$m_s = 0.048 \cdot L + 8.8 + m_{ca}$

m_s = mass of the TKL (kg)
L = length (mm)
m_{ca} = moved mass (kg)

Dynamic load capacities	Dynamic moments		Maximum permissible loads					Moved mass	Maximum length	Planar moment of inertia	
			Forces		Moments						
C (N)	M_t (Nm)	M_L (Nm)	$F_{z\,max}$(N)	$F_{y\,max}$(N)	$M_{x\,max}$ (Nm)	$M_{y\,max}$ (Nm)	$M_{z\,max}$ (Nm)	m_{ca} (kg)	L_{max} (mm)	J_y (cm⁴)	J_z (cm⁴)
79200	6300	8600	32100	19800	2570	3500	2150	15,5	3940	121	3132
53900	4300	5870	21828	13464	2570	3500	1460	15,5	3940	121	3132
79200	6300	10700	32100	19800	2570	4340	2670	17,9	3940	121	3132
53900	4300	7270	21828	13464	2570	4340	1810	17,9	3940	121	3132
98700	9800	11900	46800	23400	4680	5660	2830	24,2	3940	170	6204
67100	6710	8120	31824	15912	4680	5660	1920	24,2	3940	170	6204
98700	9800	14900	46800	23400	4680	7060	3530	27,5	3940	170	6204
67100	6710	10140	31824	15912	4680	7060	2400	27,5	3940	170	6204
129900	15590	19490	89000	30800	10680	13350	4620	35,4	3940	223	10492
		28330				19410	6710	44,6			
180600	23390	37160				25460	8800	56,1			

High Precision Ball Runner Blocks

High Speed Ball Runner Blocks

Calculation principles

☞ The attractive force of the motor must be taken into account when calculating the service life!

Combined equivalent load on bearing of the linear guide

$$F_{comb} = |F_y| + |F_z| + C \cdot \frac{|M_x|}{M_t} + C \cdot \frac{|M_y|}{M_L} + C \cdot \frac{|M_z|}{M_L}$$

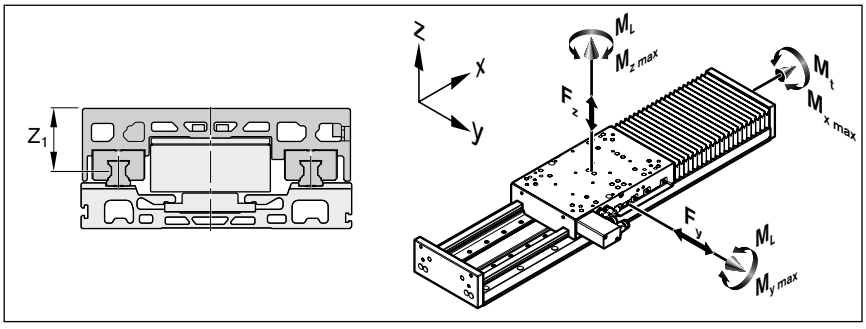

C = dynamic load capacity (N)
F_{comb} = combined equivalent load on bearing (N)
F_y = force in y-direction (N)
F_z = force in z-direction (Consider the attractive force of the motor) (N)
L = nominal life (m)
L_h = nominal life (h)
M_L = dynamic longitudinal moment load capacity (Nm)
M_t = dynamic torsional moment load capacity (Nm)
M_x = torsional moment about the x-axis (Nm)
M_y = torsional moment about the y-axis (Nm)
M_z = torsional moment about the z-axis (Nm)
Z_1 = application point of the effective force (mm)

Nominal life
Nominal life of the guideway in meters:

$$L = \left(\frac{C}{F_{comb}}\right)^3 \cdot 10^5$$

Nominal life of the guideway in hours:

$$L_h = \frac{L}{3600 \cdot v_m}$$

Technical Data

Selection charts

Travel time for one stroke without waiting time for horizontal operation with water cooling. The charts are intended only as a rough guide for selection of the standard Ball Rail Table. Precise calculations must be performed separately for the specific cycle.

Payload 10 kg

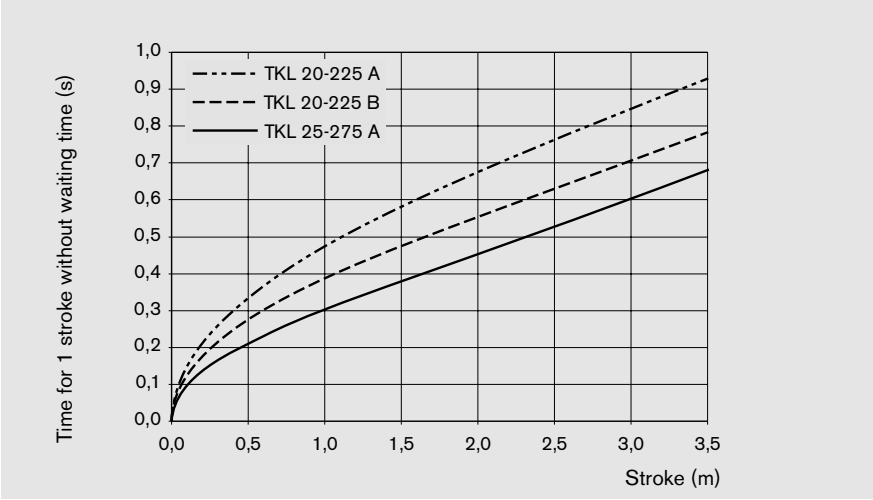

Payload 30 kg

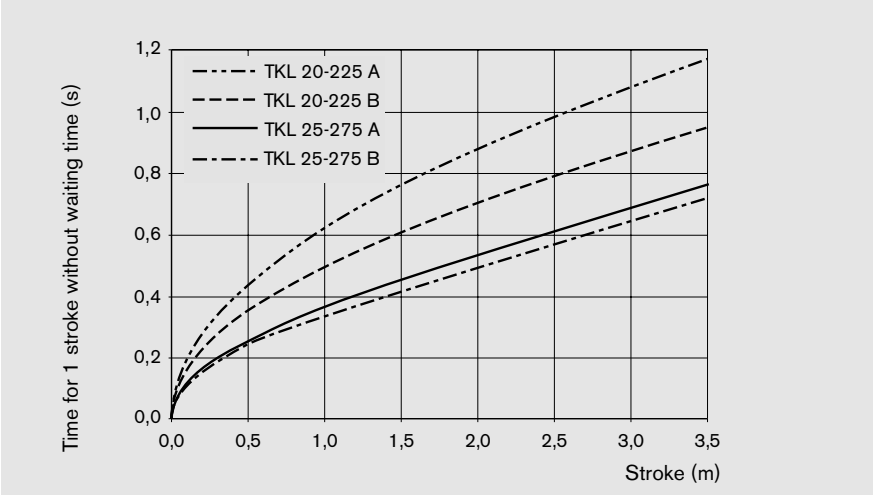

Payload 50 kg

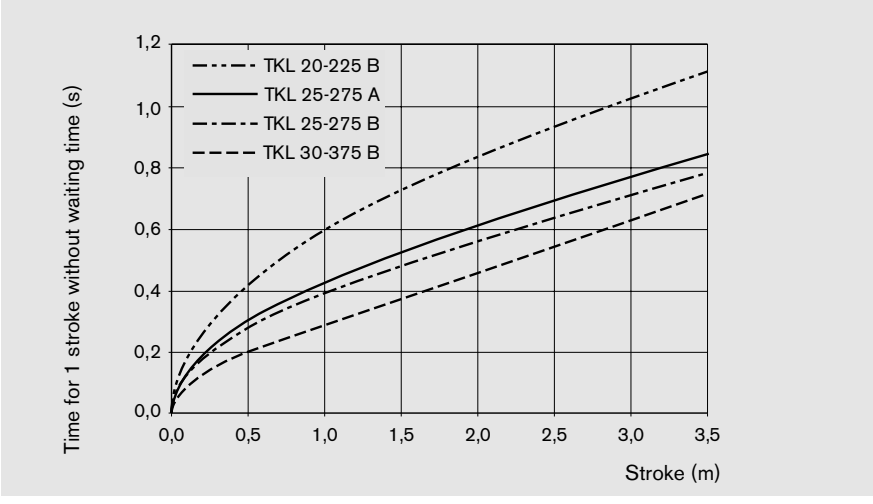

Payload 100 kg

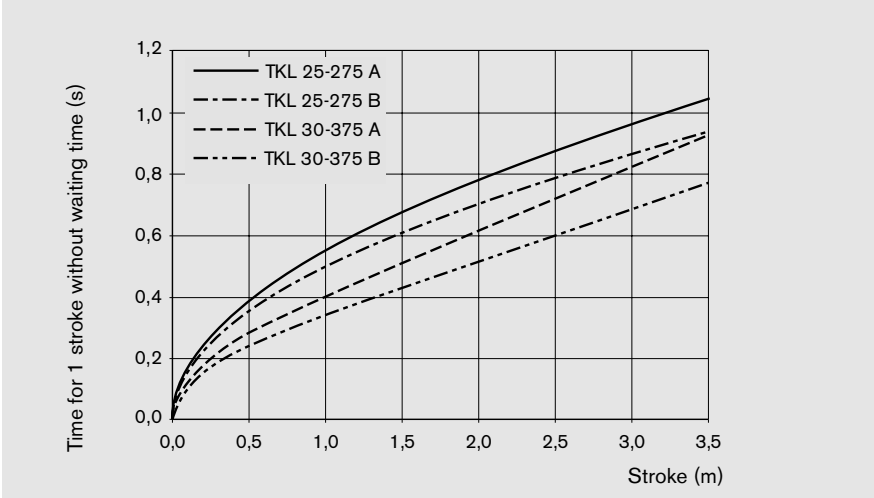

Payload 150 kg

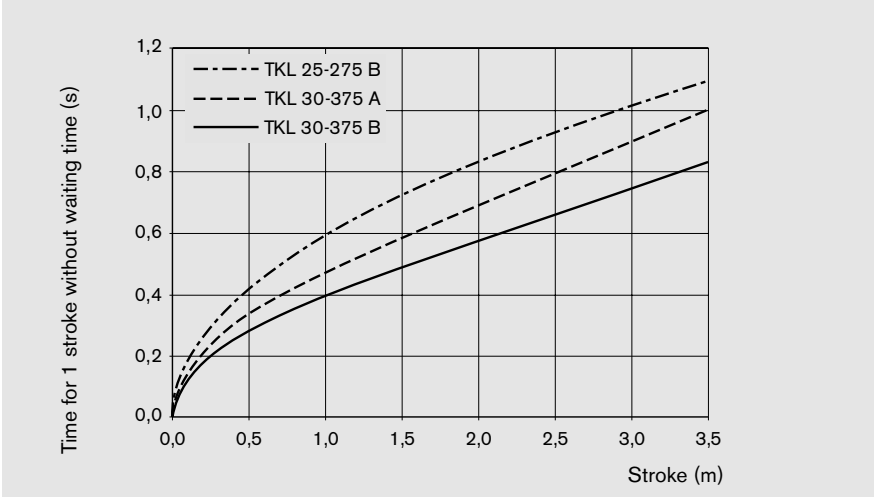

Payload 250 kg

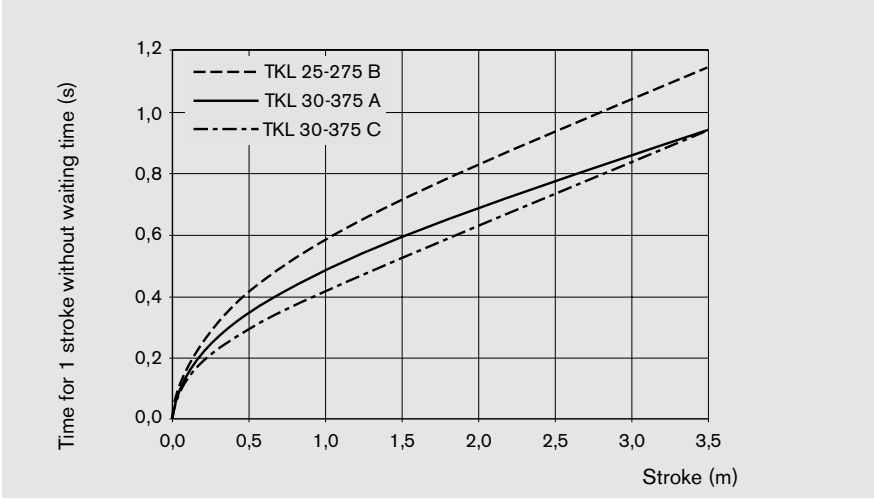

TKL 20-225 Components and Ordering Data

Part number, length R1450 305 10, ... mm	Version	Type	Guideway	Drive unit Motor winding 250	 300	Carriage Ball Runner Blocks High Precision $V_{max} \leq 5$ m/s[1)] Preload 8% C	 High-speed $V_{max} > 5$ m/s[1)] Preload 8% C	
with integrated measuring system	IM01	Primary part A $L_{ca} = 340$	01		08	02	04	
		Primary part B $L_{ca} = 400$	01	17		12	14	
with glass scale	GM02	Primary part A $L_{ca} = 340$	05		08	07		
		Primary part B $L_{ca} = 400$	05	17		17		

L_{ca} = carriage length
------- Optional

1) The velocity depends on the motor and the supply voltage.
2) To be selected for non-horizontal installation
3) Recommended standard configuration:
   – 2 mechanical switches
   – 1 proximity switch

Cover		Position measuring system		End cushioning		Switches[3]	Documentation	
PU bellows								
with	without	Integrated measuring system	Glass scale	with cushioning	with cushioning and clamping[2]		Standard report	Special report
	05	21		11	21		01	02 Frictional drag
01		21		12	22			
	05	21		11	21			04 Running accuracy
01		21		12	22			
	05		31	11	21			05 Positioning accuracy
01			31	12	22			
	05		31	11	21			
01			31	12	22			

Without switch

without switch	00
without cable duct	

With switch

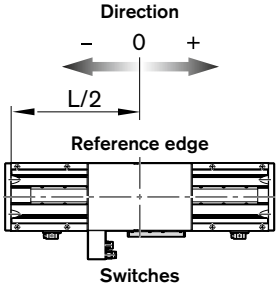

External switches

PNP NC	**Switching cam, external**	**External socket/ plug (loose)**
11-A +/–... mm		
PNP NO		
13-A +/–... mm		
Mechanical		
15-A +/–... mm	16	17

Cable duct (loose)

Cable duct	20 - X....

Switch activation point: Is the distance between the carriage center and the zero point when a switch is activated (given in mm).
Example: mechanical switch, zero point is at L/2.
Maximum switching distance: = 0.5 x (max. travel) – excess travel = 0.5 x stroke
Effective stroke = max. travel – 2 x excess travel

Excess travel:
For safe operation, the excess travel must be longer than the braking distance. The acceleration travel can be taken as a guideline value for the braking distance. To cushion the moved mass and reduce the excess travel, customers should install separate shock absorbers at the load center of gravity. These should be supported on the machine frame.

TKL 20-225 Dimension Drawing

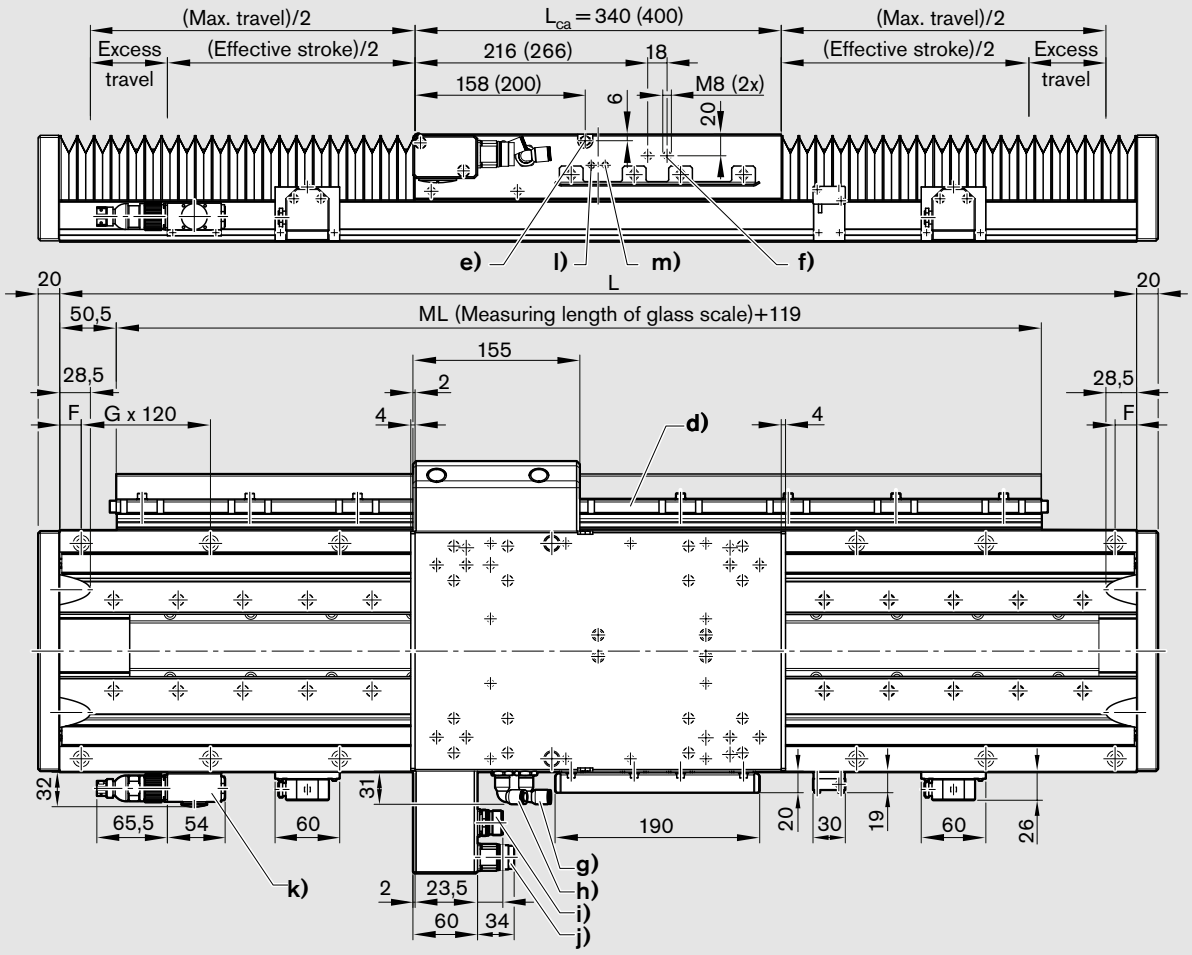

View of end face

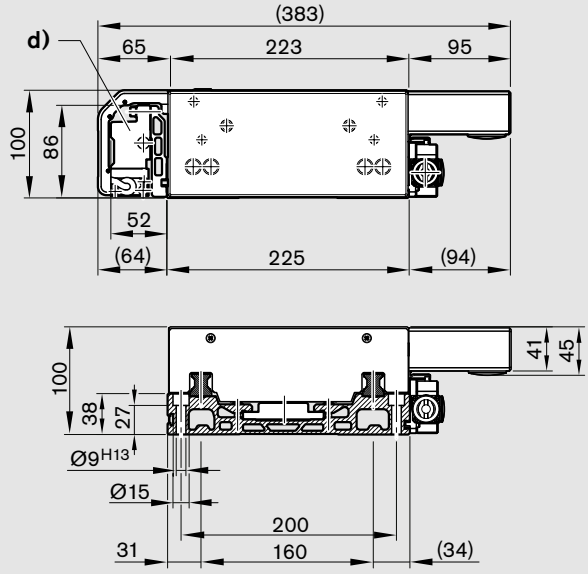

a) M8 - min. 12 deep (8x)
b) M6 - min. 9 deep (12x)
c) 8^{H7} - 18 deep (5x)
d) Glass scale
e) One-point lubrication via funnel-type lube nipple DIN3405 AM8x1 on both sides
f) Mounting hole pattern for power cable chain
g) Return cooling connection for hose Ø8 mm
h) Supply cooling connection for hose Ø8 mm
i) Measuring system socket
j) Motor socket
k) Socket plug
l) Air connection M5 for clamping unit
m) Air filter for clamping unit

Distance between switch activation points of two switches

Switch position	For switch combination	Min. spacing (mm)
external	mechanical – mechanical	60.0
	mechanical – proximity	45.0
	proximity – proximity	12.5

Mounting hole pattern for carriage length L_{ca} = 340

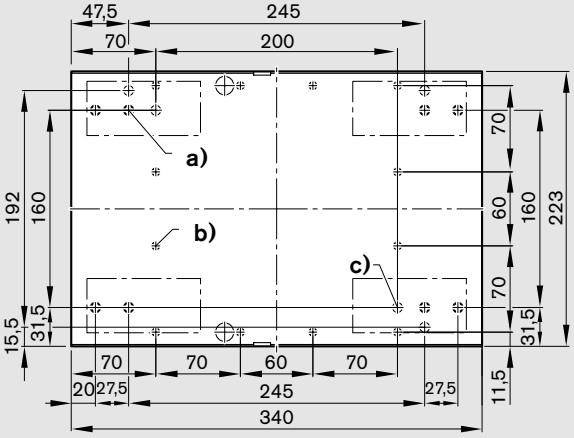

Mounting hole pattern for carriage length L_{ca} = 400

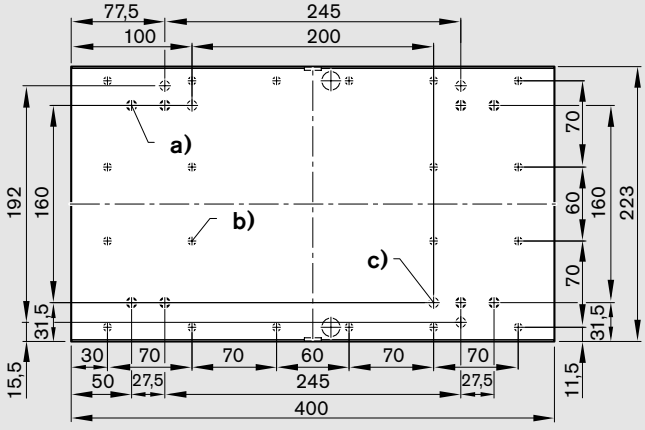

Length L (mm)	Counterbored mounting hole spacing				Max. travel (mm) for version with bellows and carr. length L_{ca}		without bellows and carr. length L_{ca}	
	F	G	x 120	F	340	400	340	400
460	50	3	x120	50	70	-	-	-
520	20	4	x120	20	122	70	105	-
580	50	4	x120	50	174	122	165	105
640	20	5	x120	20	226	174	225	165
700	50	5	x120	50	278	226	285	225
760	20	6	x120	20	330	278	345	285
820	50	6	x120	50	382	330	405	345
880	20	7	x120	20	434	382	465	405
940	50	7	x120	50	486	434	525	465
1000	20	8	x120	20	538	486	585	525
1060	50	8	x120	50	590	538	645	585
1120	20	9	x120	20	642	590	705	645
1180	50	9	x120	50	694	642	765	705
1240	20	10	x120	20	746	694	825	765
1300	50	10	x120	50	798	746	885	825
1360	20	11	x120	20	850	798	945	885
1420	50	11	x120	50	902	850	1005	945
1480	20	12	x120	20	954	902	1065	1005

Length L (mm)	Counterbored mounting hole spacing				Max. travel (mm) for version with bellows and carr. length L_{ca}		without bellows and carr. length L_{ca}	
	F	G	x 120	F	340	400	340	400
1540	50	12	x120	50	1006	954	1125	1065
1600	20	13	x120	20	1058	1006	1185	1125
1660	50	13	x120	50	1110	1058	1245	1185
1720	20	14	x120	20	1162	1110	1305	1245
1780	50	14	x120	50	1214	1162	1365	1305
1840	20	15	x120	20	1266	1214	1425	1365
1900	50	15	x120	50	1318	1266	1485	1425
1960	20	16	x120	20	1370	1318	1545	1485
2020	50	16	x120	50	1422	1370	1605	1545
2080	20	17	x120	20	1474	1422	1665	1605
2140	50	17	x120	50	1526	1474	1725	1665
2200	20	18	x120	20	1578	1526	1785	1725
2260	50	18	x120	50	1630	1578	1845	1785
2320	20	19	x120	20	1682	1630	1905	1845
2380	50	19	x120	50	1734	1682	1965	1905
2440	20	20	x120	20	1786	1734	2025	1965
2500	50	20	x120	50	1838	1786	2085	2025
2560	20	21	x120	20	1890	1838	2145	2085
2620	50	21	x120	50	1942	1890	2205	2145
2680	20	22	x120	20	1994	1942	2265	2205
2740	50	22	x120	50	2046	1994	2325	2265
2800	20	23	x120	20	2098	2046	2385	2325
2860	50	23	x120	50	2150	2098	2445	2385
2920	20	24	x120	20	2202	2150	2505	2445
2980	50	24	x120	50	2254	2202	2565	2505
3040	20	25	x120	20	2306	2254	2625	2565
3100	50	25	x120	50	2358	2306	2685	2625
3160	20	26	x120	20	2410	2358	2745	2685
3220	50	26	x120	50	2462	2410	2805	2745
3280	20	27	x120	20	2513	2462	2865	2805
3340	50	27	x120	50	2565	2513	2925	2865
3400	20	28	x120	20	2617	2565	2985	2925
3460	50	28	x120	50	2669	2617	3045	2985
3520	20	29	x120	20	2721	2669	3105	3045
3580	50	29	x120	50	2773	2721	3165	3105
3640	20	30	x120	20	2825	2773	3225	3165
3700	50	30	x120	50	2877	2825	3285	3225
3760	20	31	x120	20	2929	2877	3345	3285
3820	50	31	x120	50	2981	2929	3405	3345
3880	20	32	x120	20	3033	2981	3465	3405
3940	50	32	x120	50	3085	3033	3525	3465

TKL 25-275 Components and Ordering Data

Part number, length R1450 705 10, ... mm	Version	Type	Guideway	Drive unit Motor winding 250	 300	Carriage Ball Runner Blocks High Precision $V_{max} \leq 5$ m/s[1)] Preload 8% C	 High-speed $V_{max} > 5$ m/s[1)] Preload 8% C	
with integrated measuring system	IM01	Primary part A $L_{ca} = 395$	01		08	02	04	
		Primary part B $L_{ca} = 465$	01	17		12	14	
with glass scale	GM02	Primary part A $L_{ca} = 395$	05		08	07		
		Primary part B $L_{ca} = 465$	05	17		17		

L_{ca} = carriage length
------- Optional

1) The velocity depends on the motor and the supply voltage.
2) To be selected for non-horizontal installation
3) Recommended standard configuration:
   – 2 mechanical switches
   – 1 proximity switch

	Cover		Position measuring system		End cushioning		Switches[3]	Documentation	
	PU bellows with	PU bellows without	Integrated measuring system	Glass scale	with cushioning	with cushioning and clamping[2]		Standard report	Special report
		05	21		11	21		01	02 Frictional drag
	01		21		12	22			
		05	21		11	21			04 Running accuracy
	01		21		12	22			
		05		31	11	21			05 Positioning accuracy
	01			31	12	22			
		05		31	11	21			
	01			31	12	22			

Without switch

without switch	00
without cable duct	

With switch

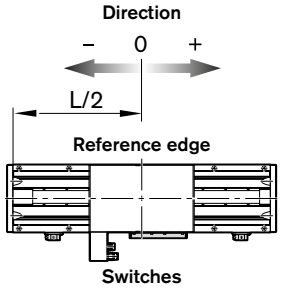

External switches

PNP NC 11-A +/–... mm	**Switching cam, external**	**External socket/ plug (loose)**
PNP NO 13-A +/–... mm		
Mechanical 15-A +/–... mm	16	17

Cable duct (loose)

Cable duct	20 - X....

Switch activation point: Is the distance between the carriage center and the zero point when a switch is activated (given in mm).
Example: mechanical switch, zero point is at L/2.
Maximum switching distance: = 0.5 x (max. travel) – excess travel = 0.5 x stroke
Effective stroke = max. travel – 2 x excess travel

Excess travel:
For safe operation, the excess travel must be longer than the braking distance. The acceleration travel can be taken as a guideline value for the braking distance. To cushion the moved mass and reduce the excess travel, customers should install separate shock absorbers at the load center of gravity. These should be supported on the machine frame.

TKL 25-275 Dimension Drawing

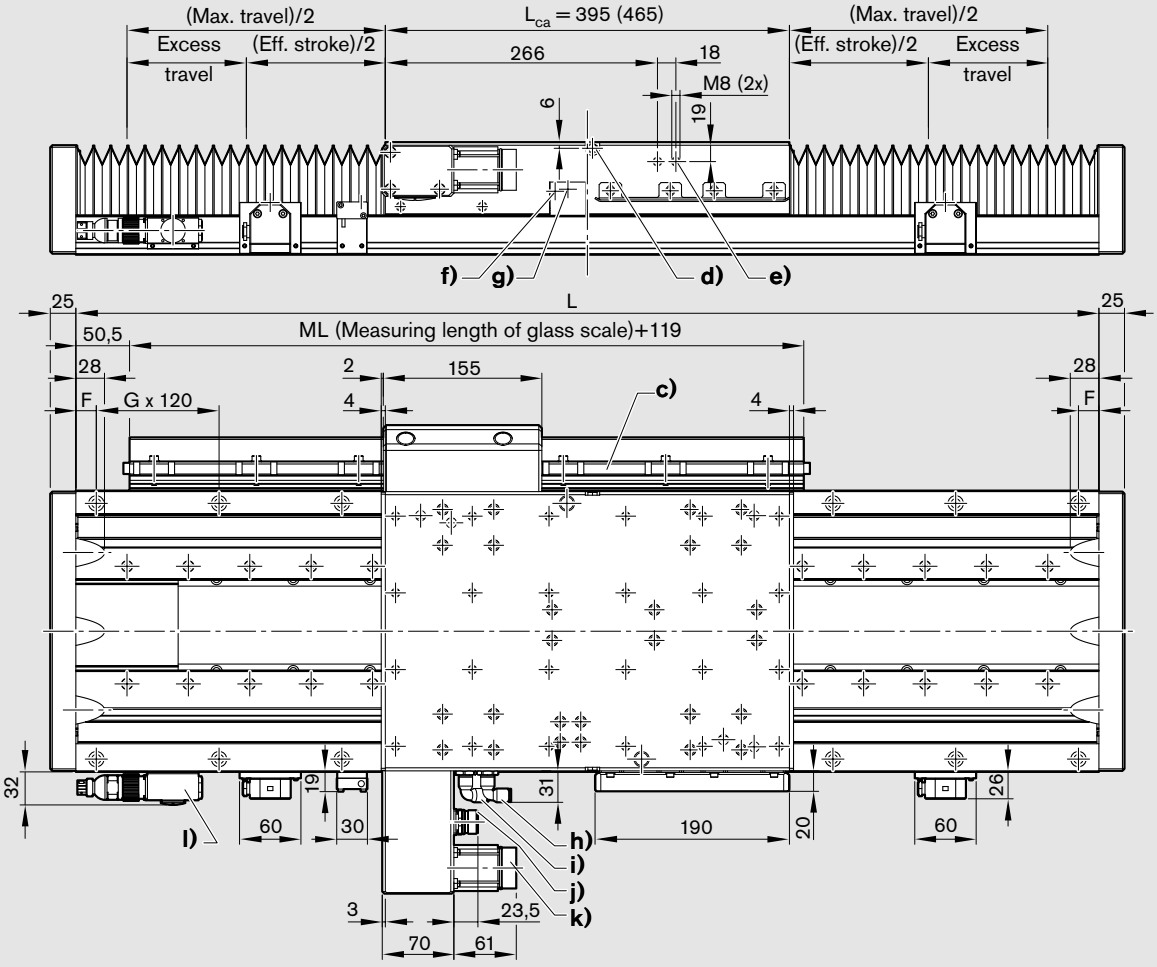

View of end face

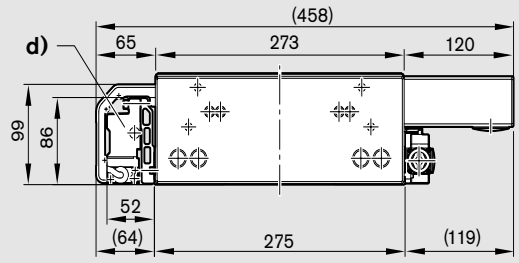

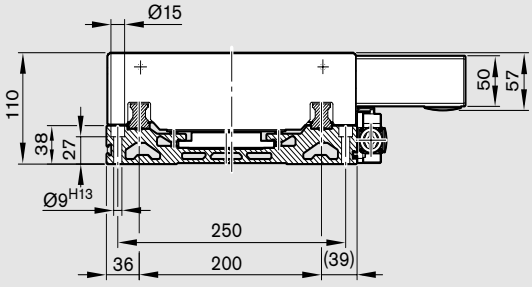

a) M8 - min. 12 deep (24x)
b) 10^{H7} - 20 deep (5x)
c) Glass scale
d) One-point lubrication via funnel-type lube nipple DIN3405 AM8x1 on both sides
e) Mounting hole pattern for power cable chain
f) Air connection M5 for clamping unit
g) Air filter for clamping unit
h) Return cooling connection for hose Ø8 mm
i) Supply cooling connection for hose Ø8 mm
j) Measuring system socket
k) Motor socket
l) Socket plug

Distance between switch activation points of two switches

Switch position	For switch combination	Min. spacing (mm)
external	mechanical – mechanical	60.0
	mechanical – proximity	45.0
	proximity – proximity	12.5

Mounting hole pattern for carriage length L_{ca} = 395

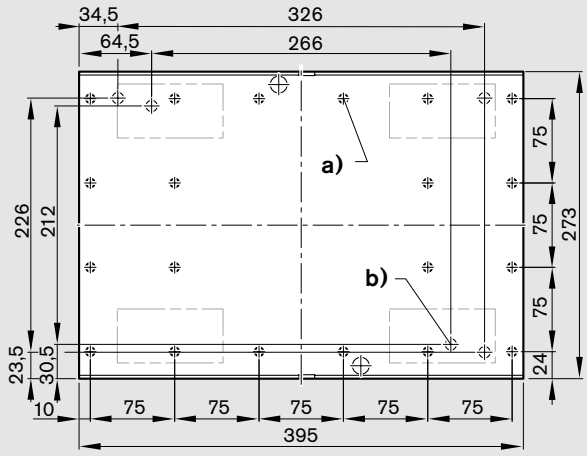

Mounting hole pattern for carriage length L_{ca} = 465

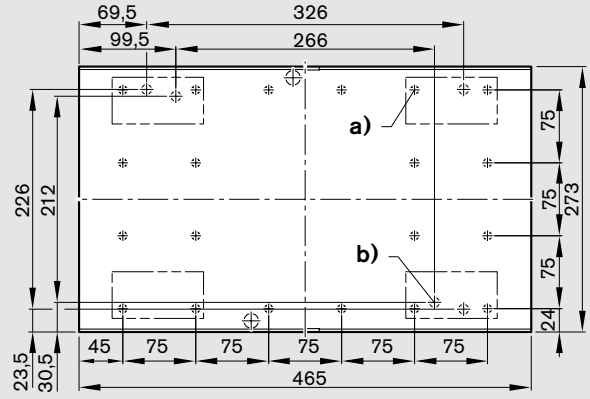

Length L (mm)	Counterbored mounting hole spacing F G x 120 F	Max. travel (mm) for version with bellows and carr. length L_T 395	465	without bellows and carr. length L_{ca} 395	465
580	50 4 x 120 50	122	-	111	-
640	20 5 x 120 20	175	113	171	101
700	50 5 x 120 50	228	166	231	161
760	20 6 x 120 20	282	219	291	221
820	50 6 x 120 50	335	273	351	281
880	20 7 x 120 20	388	326	411	341
940	50 7 x 120 50	441	379	471	401
1000	20 8 x 120 20	494	432	531	461
1060	50 8 x 120 50	547	485	591	521
1120	20 9 x 120 20	601	539	651	581
1180	50 9 x 120 50	654	592	711	641
1240	20 10 x 120 20	707	645	771	701
1300	50 10 x 120 50	760	698	831	761
1360	20 11 x 120 20	813	751	891	821
1420	50 11 x 120 50	867	805	951	881
1480	20 12 x 120 20	920	858	1011	941
1540	50 12 x 120 50	973	911	1071	1001

Length L (mm)	Counterbored mounting hole spacing F G x 120 F	Max. travel (mm) for version with bellows and carr. length L_T 395	465	without bellows and carr. length L_{ca} 395	465
1600	20 13 x 120 20	1026	964	1131	1061
1660	50 13 x 120 50	1079	1017	1191	1121
1720	20 14 x 120 20	1133	1071	1251	1181
1780	50 14 x 120 50	1186	1124	1311	1241
1840	20 15 x 120 20	1239	1177	1371	1301
1900	50 15 x 120 50	1292	1230	1431	1361
1960	20 16 x 120 20	1345	1283	1491	1421
2020	50 16 x 120 50	1399	1336	1551	1481
2080	20 17 x 120 20	1452	1390	1611	1541
2140	50 17 x 120 50	1505	1443	1671	1601
2200	20 18 x 120 20	1558	1496	1731	1661
2260	50 18 x 120 50	1611	1549	1791	1721
2320	20 19 x 120 20	1665	1602	1851	1781
2380	50 19 x 120 50	1718	1656	1911	1841
2440	20 20 x 120 20	1771	1709	1971	1901
2500	50 20 x 120 50	1824	1762	2031	1961
2560	20 21 x 120 20	1877	1815	2091	2021
2620	50 21 x 120 50	1930	1868	2151	2081
2680	20 22 x 120 20	1984	1922	2211	2141
2740	50 22 x 120 50	2037	1975	2271	2201
2800	20 23 x 120 20	2090	2028	2331	2261
2860	50 23 x 120 50	2143	2081	2391	2321
2920	20 24 x 120 20	2196	2134	2451	2381
2980	50 24 x 120 50	2250	2188	2511	2441
3040	20 25 x 120 20	2303	2241	2571	2501
3100	50 25 x 120 50	2356	2294	2631	2561
3160	20 26 x 120 20	2409	2347	2691	2621
3220	50 26 x 120 50	2462	2400	2751	2681
3280	20 27 x 120 20	2516	2454	2811	2741
3340	50 27 x 120 50	2569	2507	2871	2801
3400	20 28 x 120 20	2622	2560	2931	2861
3460	50 28 x 120 50	2675	2613	2991	2921
3520	20 29 x 120 20	2728	2666	3051	2981
3580	50 29 x 120 50	2782	2719	3111	3041
3640	20 30 x 120 20	2835	2773	3171	3101
3700	50 30 x 120 50	2888	2826	3231	3161
3760	20 31 x 120 20	2941	2879	3291	3221
3820	50 31 x 120 50	2994	2932	3351	3281
3880	20 32 x 120 20	3047	2985	3411	3341
3940	50 32 x 120 50	3101	3039	3471	3401

TKL 30-325 Components and Ordering Data

Part number, length R1450 405 10, ... mm 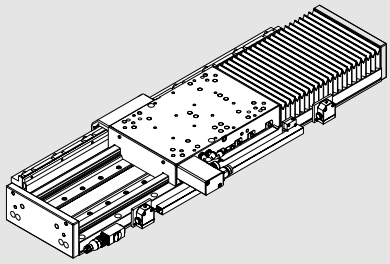	Version	Type	Guideway 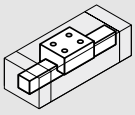	Drive unit 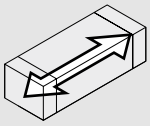 Motor winding		Carriage 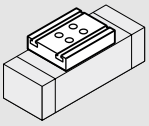 High Precision Ball Runner Blocks $V_{max} \leq 5$ m/s[1)] Preload 8% C	
				190	250		
with integrated measuring system 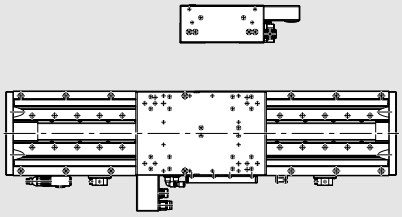	IM01	Primary part A L_{ca} = 475	01	06		02	
		Primary part B L_{ca} = 625	01		17	12	
		Primary part C L_{ca} = 775	01	26		22	
with glass scale 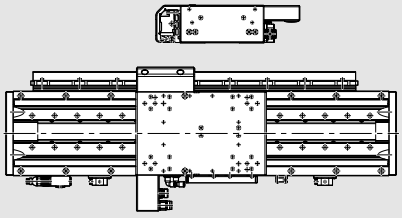	GM01	Primary part A L_{ca} = 475	05	06		07	
		Primary part B L_{ca} = 465	05		17	17	
		Primary part C L_{ca} = 775	05	26		27	

L_{ca} = carriage length
------- Optional

1) The velocity depends on the motor and the supply voltage.
2) To be selected for non-horizontal installation
3) Recommended standard configuration:
   - 2 mechanical switches
   - 1 proximity switch

Cover		Position measuring system		End cushioning		Switches[3]	Documentation	
PU bellows with	PU bellows without	Integrated measuring system	Glass scale	with cushioning	with cushioning and clamping[2]		Standard report	Special report
	05	21		11	21		01	02 Frictional drag
01		21		12	22			
	05	21		11	21			
01		21		12	22			
	05	21		11	21			04 Running accuracy
01		21		12	22			
	05		31	11	21			
01			31	12	22			
	05		31	11	21			05 Positioning accuracy
01			31	12	22			
	05		31	11	21			
01			31	12	22			

Without switch

without switch	00
without cable duct	

With switch

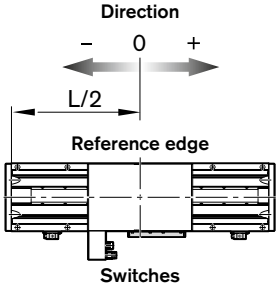

External switches

PNP NC	**Switching cam, external**	**External socket/ plug (loose)**
11-A +/–... mm		
PNP NO		
13-A +/–... mm		
Mechanical		
15-A +/–... mm	16	17

Cable duct (loose)

Cable duct	20 - X....

Switch activation point: Is the distance between the carriage center and the zero point when a switch is activated (given in mm).
Example: mechanical switch, zero point is at L/2.
Maximum switching distance: = 0.5 x (max. travel) – excess travel = 0.5 x stroke
Effective stroke = max. travel – 2 x excess travel

Excess travel:
For safe operation, the excess travel must be longer than the braking distance. The acceleration travel can be taken as a guideline value for the braking distance. To cushion the moved mass and reduce the excess travel, customers should install separate shock absorbers at the load center of gravity. These should be supported on the machine frame.

TKL 30-325 Dimension Drawing

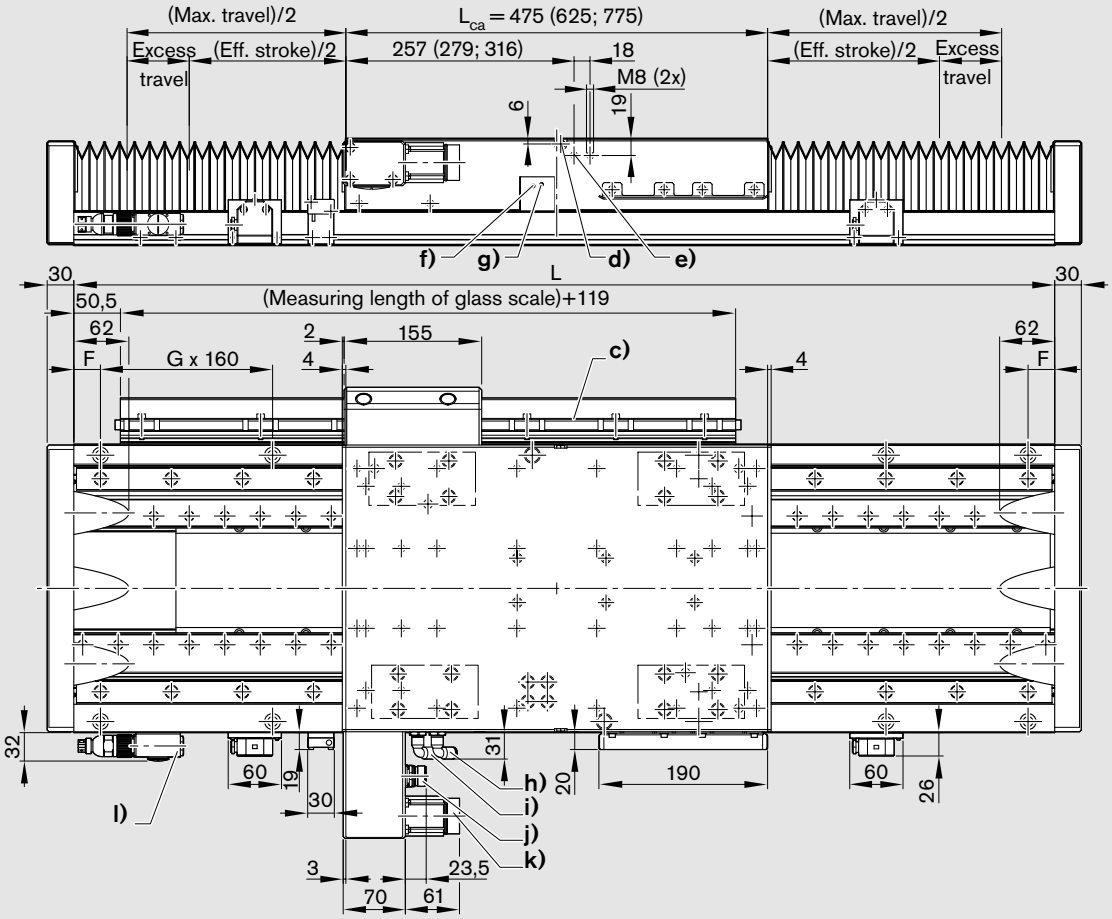

View of end face

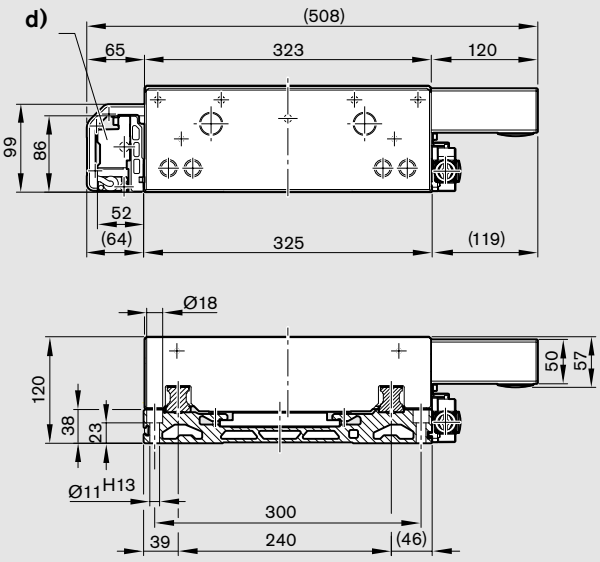

a) M8 - min. 12 deep (24x)
b) 10^{H7} - 20 deep (5x)
c) Glass scale
d) One-point lubrication via funnel-type lube nipple DIN3405 AM8x1 on both sides
e) Mounting hole pattern for power cable chain
f) Air connection M5 for clamping unit
g) Air filter for clamping unit
h) Return cooling connection for hose Ø8 mm
i) Supply cooling connection for hose Ø8 mm
j) Measuring system socket
k) Motor socket
l) Socket plug

Distance between switch activation points of two switches

Switch position	For switch combination	Min. spacing (mm)
external	mechanical – mechanical	60.0
	mechanical – proximity	45.0
	proximity – proximity	12.5

Mounting hole pattern for carriage length L_{ca} = 475

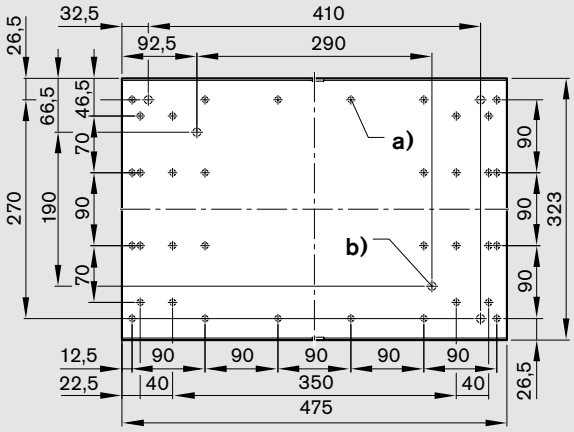

Mounting hole pattern for carriage length L_{ca} = 625

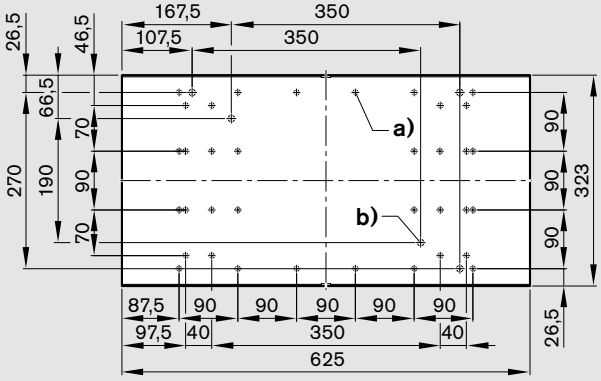

Mounting hole pattern for carriage length L_{ca} = 775

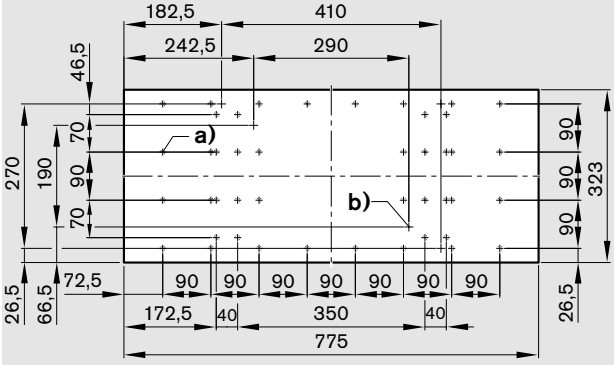

Length L (mm)	Counterbored mounting hole spacing F	G x 160	F	Max. travel (mm) for version with bellows and carr. length L_{ca} 475	625	775	without bellows and carr. length L_{ca} 475	625	775
700	30	4 x 160	30	157	-	-	-	-	-
780	70	4 x 160	70	228	-	-	163	-	-
860	30	5 x 160	30	299	166	-	243	-	-
940	70	5 x 160	70	370	237	-	323	173	-
1020	30	6 x 160	30	441	308	175	403	253	-
1100	70	6 x 160	70	512	379	246	483	333	183
1180	30	7 x 160	30	583	450	317	563	413	263
1260	70	7 x 160	70	654	521	388	643	493	343
1340	30	8 x 160	30	725	592	459	723	573	423
1420	70	8 x 160	70	796	663	530	803	653	503
1500	30	9 x 160	30	867	734	601	883	733	583
1580	70	9 x 160	70	938	805	672	963	813	663
1660	30	10 x 160	30	1008	875	743	1043	893	743
1740	70	10 x 160	70	1079	946	813	1123	973	823
1820	30	11 x 160	30	1150	1017	884	1203	1053	903
1900	70	11 x 160	70	1221	1088	955	1283	1133	983
1980	30	12 x 160	30	1292	1159	1026	1363	1213	1063
2060	70	12 x 160	70	1363	1230	1097	1443	1293	1143
2140	30	13 x 160	30	1434	1301	1168	1523	1373	1223
2220	70	13 x 160	70	1505	1372	1239	1603	1453	1303
2300	30	14 x 160	30	1576	1443	1310	1683	1533	1383
2380	70	14 x 160	70	1647	1514	1381	1763	1613	1463
2460	30	15 x 160	30	1718	1585	1452	1843	1693	1543
2540	70	15 x 160	70	1789	1656	1523	1923	1773	1623
2620	30	16 x 160	30	1860	1727	1594	2003	1853	1703
2700	70	16 x 160	70	1930	1797	1665	2083	1933	1783
2780	30	17 x 160	30	2001	1868	1735	2163	2013	1863
2860	70	17 x 160	70	2072	1939	1806	2243	2093	1943
2940	30	18 x 160	30	2143	2010	1877	2323	2173	2023
3020	70	18 x 160	70	2214	2081	1948	2403	2253	2103
3100	30	19 x 160	30	2285	2152	2019	2483	2333	2183
3180	70	19 x 160	70	2356	2223	2090	2563	2413	2263
3260	30	20 x 160	30	2427	2294	2161	2643	2493	2343
3340	70	20 x 160	70	2498	2365	2232	2723	2573	2423
3420	30	21 x 160	30	2569	2436	2303	2803	2653	2503
3500	70	21 x 160	70	2640	2507	2374	2883	2733	2583
3580	30	22 x 160	30	2711	2578	2445	2963	2813	2663
3660	70	22 x 160	70	2782	2649	2516	3043	2893	2743
3740	30	23 x 160	30	2852	2719	2586	3123	2973	2823
3820	70	23 x 160	70	2923	2790	2657	3203	3053	2903
3900	30	24 x 160	30	2994	2861	2728	3283	3133	2983
3980	70	24 x 160	70	3065	2932	2799	3363	3213	3063

Integrated Position Measuring System

Technical Data

For more information, see “Integrated Measuring System” catalog.

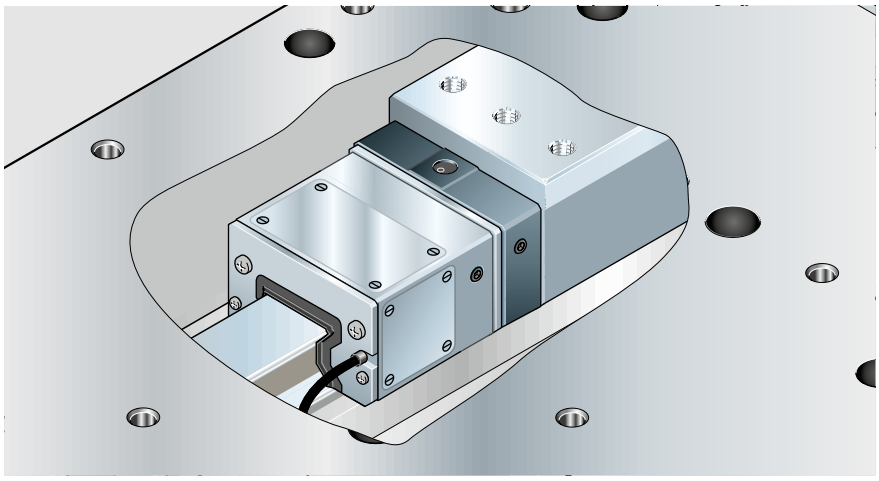

17-pin connector M23
Contact side

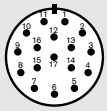

	Voltage supply				Incremental signals				Reference signals	
	7	**1**	**10**	**4**	**15**	**16**	**12**	**13**	**3**	**2**
	U_P	Sensor U_P	0V	Sensor 0V	A+	A–	B+	B–	R+	R–

Interpolation accuracy	± 3 µm
Accuracy class	± 5 µm (per 1 m measuring length)
Incremental signals	1 Vpp, pitch = 1000 µm
Reference mark	Distance coded
Voltage supply	5 V ± 5 %
Current consumption	250 mA
Vibration (55 – 2000 Hz)	≤ 100 m/s²
Shock (11 ms)	≤ 500 m/s²
Operating temperature	0 to 50 °C
Enclosure (DIN EN 60529)	IP 67 (motor IP 65)
Storage temperature	–10 to 70 °C
Max. rail length	4000 mm (one-piece)
Max. travel speed	8 m/s

Glass Scale

Absolute measuring system

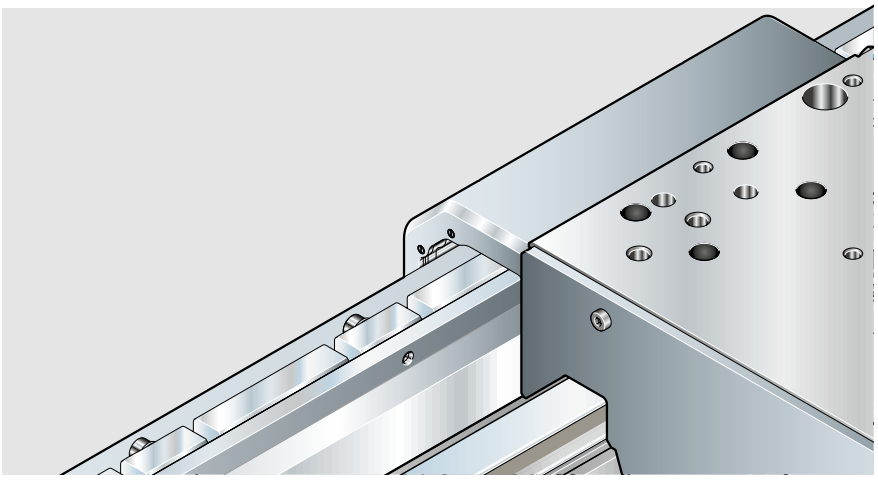

17-pin connector M23
Contact side

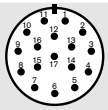

	Voltage supply					Incremental signals				Absolute position values			
	7	**1**	**10**	**4**	**11**	**15**	**16**	**12**	**13**	**14**	**17**	**8**	**9**
	U_P	Sensor U_P	0V	Sensor 0V	Inner shield	A+	A–	B+	B–	DATA+	DATA–	CLOCK+	CLOCK–

Scale	Glass scale with code track and incremental track $\alpha_{therm} \approx 8 \cdot 10^{-6}\ K^{-1}$
Accuracy class	± 5 µm (per 1 m measuring length)
Measuring length in mm	From 140 to 1840 in 100 mm steps, from 2040 to 4240 in 200 mm steps
Absolute position values	EnDat 2.2
Incremental signals	1 Vpp, pitch = 20 µm, limit frequency –3 dB = ≥ 150 kHz
Voltage supply	5 V ± 5 %
Current consumption	300 mA without load
Vibration (55 – 2000 Hz)	≤ 200 m/s²; (EN 60 068-2-6)
Shock (11 ms)	≤ 300 m/s² (EN 60 068-2-27)
Acceleration	≤ 100 m/s²; in measuring direction
Operating temperature	0 to 50 °C
Enclosure (DIN EN 60529)	IP 53 for attachment acc. to mounting instructions IP 64 for compressed air connection via DA 300
Mass	1,1 kg + 5,5 kg/m measuring length
Max. travel speed	3 m/s
Required feed force	≤ 4 N

Pneumatic Clamping Units MKS

Clamping Unit MKS

Clamps without pressurization (spring energy)
- Release pressure min. 5.5 bar
- Max. pneumatic operating pressure: 8 bar
- Operating temperature range t: 0 - 70 °C
- Increased holding force through air-plus port

Notes for mounting
- Make sure the adjoining structure is sufficiently rigid.
- Use only filtered and lubricated air. The specified filter mesh size is 25 µm.
- Read the mounting instructions before start-up.

Circuitry[1] for standard air port

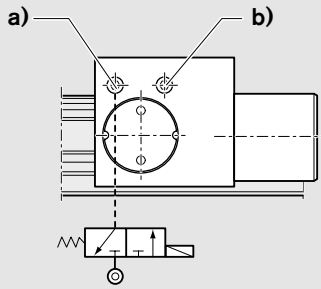

a) Air port M5
b) Air filter
Nominal diameter min. 6 mm
for TKL 20-225 min. 4 mm

Circuitry[2] for air-plus port

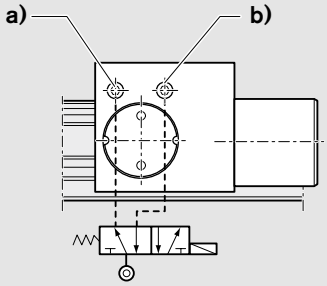

a) Air port M5
b) Air-plus port M5
Nominal diameter min. 6 mm
for TKL 20-225 min. 4 mm

TKL	Holding force		Air consumption (normalized)	
	Spring energy[1] (N)	with air-plus port[2] (N)	Air port (dm^3/stroke)	Air-plus port (dm^3/stroke)
20-225	600	1 300	0.019	0.063
25-275	750	1 500	0.021	0.068
30-325[3]	1 050	2 600	0.031	0.121

1) Holding force achieved by spring energy. Testing is performed in the installed condition with a film of lubricating oil (ISO VG 68).
2) Increased holding force through additional pressurization with 6.0 bar compressed air at the air-plus port. Switching via 5/2 or 5/3-way directional control valve.
3) For TKL 30-325 C (carriage length L_{ca} = 775 mm), 2 clamping units available on request.

Accessories

Switching system

Overview

Item		Part number
1	Socket-plug	R1175 001 53
2	Mechanical switch with mounting components	R1175 001 51
	Mechanical switch without mounting components	R3453 040 16
3	Switching cam	R1175 001 50
4	Proximity switch	
	– Mounting components without switch	R1175 201 52
	– PNP NC	R3453 040 01
	– NPN NC	R3453 040 02
	– PNP NO	R3453 040 03
	– NPN NO	R3453 040 04
5	Cable duct (length max. 4m)	R0396 620 17, length ..... mm

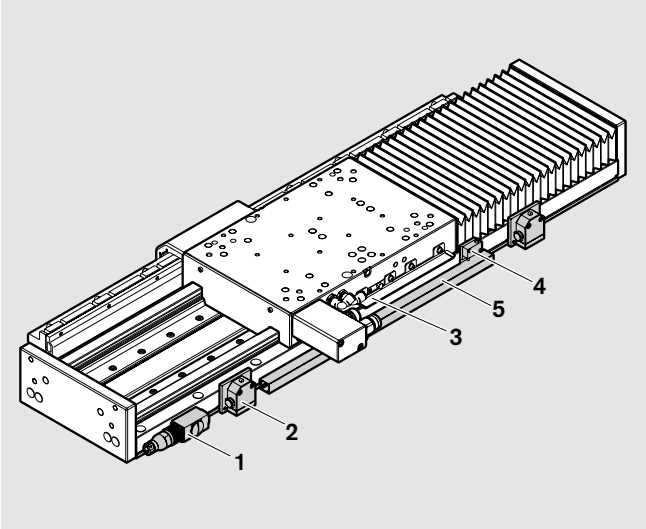

External socket and plug for external switch

- The socket and plug each have 16 pins
- The socket and plug are not pre-wired. The switch activation points can thus be optimized during start-up.
- A plug is provided.

The plug can be mounted in three directions (see diagram).

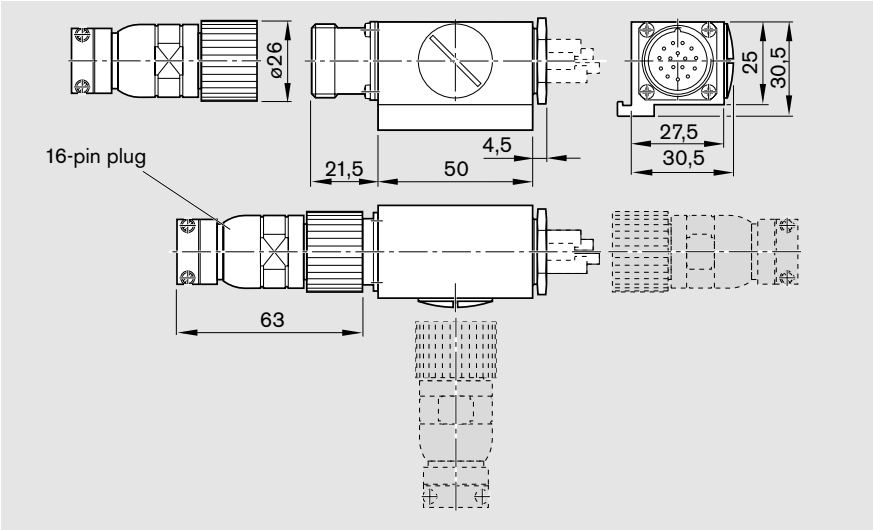

Mechanical switch

Reproducibility	=	± 0.05 mm
Permissible ambient temperature	=	−5°C to +80°C
Enclosure	=	DIN 40050 IP 67
Contact time	=	< 2 ms
Insulation	=	group C to VDE 0110
Rated voltage	=	250 V AC
Continuous current	=	5 A
Switching capacity at 220 V, 40-60 Hz	=	cosφ = 0.8 at 2 A
Contact resistance when new	=	< 240 µm
Connection	=	screw connection
Contact system	=	single-pole changeover
Switch system	=	snap-action
B_{10d} as per EN ISO 13849-1		1 000 000 switching cycles

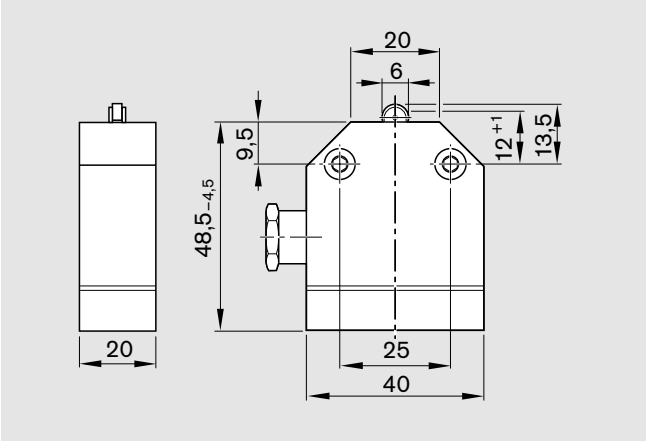

Proximity switch

Miniature circuit-breakers with potted cable
(3 x 0.14 mm² Unitronic)

Housing form	=	NO
Minisensor	=	Form A DIN 41635
Voltage	=	10...30 V DC
Residual ripple	=	≤ 10 %
Load	=	200 mA
No-load current	=	≤ 20 mA
Switching frequency	=	max. 1500 Hz
Temperature-related shift in make point	=	≤ 4 µm/°C
Output signal steepness	=	≥ 1 V/µs
Repeatability of make point to EN 50008	=	≤ 0.1 mm
$MTTF_d$ as per EN ISO 13849-1		30 – 100 years

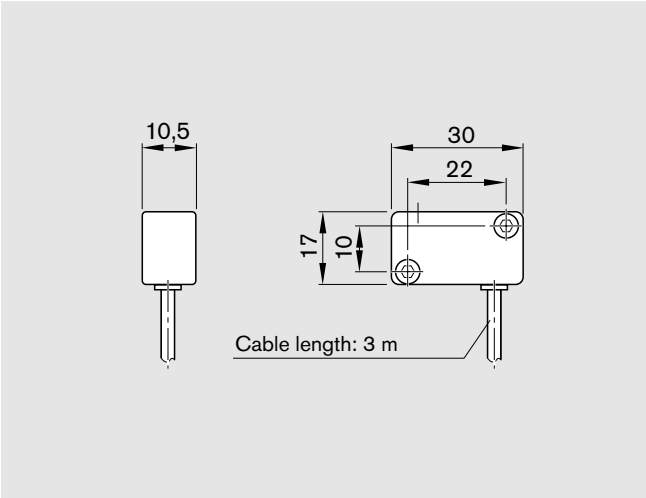

Cable duct

- The cable duct holds a maximum of two cables for mechanical switches and three cables for proximity switches.
- The duct is fixed by clipping it into the T-slot on the table and is secured by tightening the fixing screws.
- The fixing screws and cable grommets are supplied with the duct.

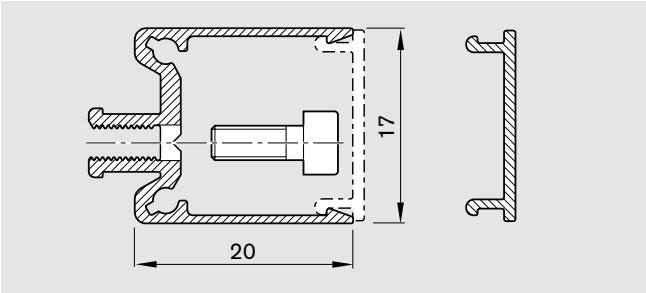

Accessories

Cables

(Note: The controller side of power cables is pre-assembled with wire end ferrules or cable lug).

Cable set for Ball Rail Table TKL with servo controller IndraDrive, consisting of power supply cable and feedback cable

TKL	Ø feedback cable max. (mm)	Ø power supply cable max. (mm)	Cable set mass (kg/m)	Motor	Part number, ... length
20-225	10	12.5	0.37	MLP040	R113000118
25-275	10	15.8	0.48	MLP070	R113000126
30-325	10	17.3	0.64	MLP100	R113000141

Cable pre-assembly

TKL	Motor side	Controller side			
		HCS02.* – W0028	HCS02.* – W0054	HCS03.* – W0070	HCS03.* – W0150
20-225	01 1)		10 1)		
25-275	02 1)			11 1)	12 1)
30-325	03 1)				12 1)

1) Please specify in addition to the part number when ordering.

Cable pre-assembly

TKL	Motor-side	Controller side			
		HCS02.* – W0028	HCS02.* – W0054	HCS03.* – W0070	HCS03.* – W0150
20-225	01 1)		10 1)		
25-275	02 1)			11 1)	12 1)
30-325	03 1)				12 1)

Cable data Power Cable

		TKL		
		20-225	**25-275**	**30-325**
Cable cross-section of wires	(mm^2)	4 x 1.0	4 x 2.5	4 x 4.0
Cross-section of control wires (holding brake, temperature monitoring or control voltage)	(mm^2)	2x (2 x 0.75)	2x (2 x 1.0)	2x (2 x 1.0) + (2 x 1.5)
Diameter (D)	(mm)	12 ± 0.5	14.8 ± 1.0	16.3 ± 1.0
Minimum bending radius for fixed installation	(mm)	6 x D		
for flexing installation	(mm)	10 x D		
Number of bending cycles (in million)		5		
Specified cable weight	(kg/m)	0.22	0.33	0.49
Construction		Designed for continuous alternate bending use		
Burning behavior		Burning behavior fulfills the requirements according to DIN EN 50 265-2-1 and UL Sub 758 AWM Section G page 95		
Chemical characteristics		Extensive resistance to mineral oils and greases, resistant to hydrolysis, contains no any silicones or halogens		
Approvals		UL and CSA listed		
Permissible ambient temperature for storage	(°C)	–30 °C to +80 °C		
Permanent operating temp. for fixed installation	(°C)	–30 °C to +80 °C		
for flexing installation	(°C)	–20 °C to +80 °C		
Outer jacket, - material and - color of cable		Matt and low-adhesion surface PUR orange		

Cable data
Encoder Cable

		TKL all sizes
Cross-section of supply wires	(mm^2)	4 x 1.0
Cross-section of control wires	(mm^2)	4 x 2 x 0.14 + (4 x 0.14)StC)
Diameter (D)	(mm)	9.7 ± 0.3
Minimum bending radius for fixed installation for flexing installation	 (mm) (mm)	 6 x D 10 x D
Number of bending cycles (in million)		5
Specified cable weight	(kg/m)	0.15
Construction		Designed for continuous alternate bending use
Burning behavior		Burning behavior fulfills the requirements according to DIN EN 50 265-2-1 and UL Sub 758 AWM Section G page 95
Chemical characteristics		Extensive resistance to mineral oils and greases, resistant to hydrolysis, contains no any silicones or halogens
Approvals		UL and CSA listed
Permissible ambient temperature for storage	(°C)	–30 °C to +80 °C
Permanent operating temp. for fixed installation for flexing installation	 (°C) (°C)	 –30 °C to +80 °C –20 °C to +80 °C
Outer jacket, - material and - color of cable		Matt and low-adhesion surface PUR orange

Tubing

Characteristics:
- Calibrated on the outside
- Suitable for use in cable drag chains
- Halogen-free

Description	Plastic tube
Part number	R3499 501 00[1)]
Outside diameter	8 mm
Wall thickness	1.15 mm
Length	25 m
Color	Black
Bending radius	min. 30 mm
Max. operating pressure at 20 °C	10 bar
Ambient temperature, min./max.	–30° C / +80° C
Material	Polyester-polyurethane
Weight	0.03 kg/m

1) When ordering, please specify the quantity.

Accessories

Cable drag chains

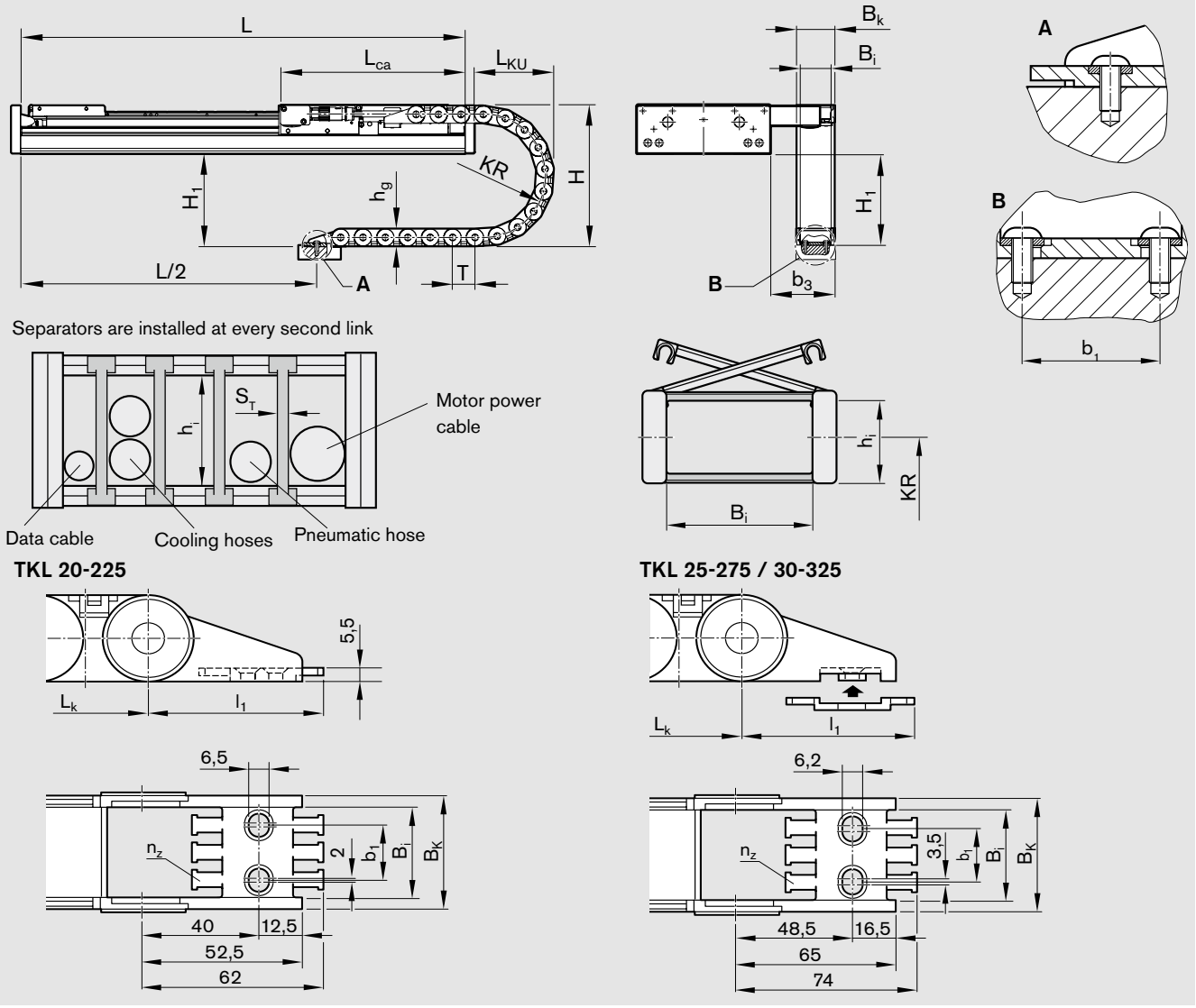

TKL		Part number Cable drag chain 1 m sections	Assembly kit Mounting accessories	Dimensions (mm) b_1	b_3	B_i	B_K	H	H_1	h_g	h_i	KR	L_{KU}	n_z	S_T	T	Z	Max. accel. a_{perm} (kg/s²)	Weight of chain m_c (kg/m)
20-225	A	R3454 030 79	R1414 000 23	36	104	50	63	228	130	28	20	100	100	4	2.0	34.5	475	50	0.53
	B												90				492		
25-275	A	R3454 030 95	R1414 000 24	44	121	58	76	286	180	36	26	125	150	4	2.5	45.5	610	50	0.95
	B												80				575		
30-325	A	R3454 030 95	R1414 000 24	44	121	58	76	286	170	36	26	125	50	4	2.5	45.5	561	50	0.95
	B												–				508		
	C												–				466		

Dead weight of the supply lines in the cable drag chain

TKL		20-225	20-275	30-325
With cooling line	(kg/m)	0.6	0.7	0.9
Without cooling line	(kg/m)	0.4	0.5	0.7

Number of chain links n_c
Round up the result.

$$n_c = \frac{0{,}5 \cdot (L - L_{ca}) + Z}{T}$$

n_c = number of chain links
L = length of linear motion system
L_{ca} = length of carriage

Chain length L_c (without chain brackets)

$$L_c = n_c \cdot T$$

L_c = chain length
T = chain pitch

Calculation of chain length (example)

$$n_c = \frac{0{,}5 \cdot (1660 - 400) + 492}{34{,}5}$$

$n_c = 32.52$ round up to 33

$L_c = n_c \cdot T = 33 \cdot 34.5$ mm = 1122 mm round up to 2000 mm = 2 round up to (m)

Self-supporting length L_f

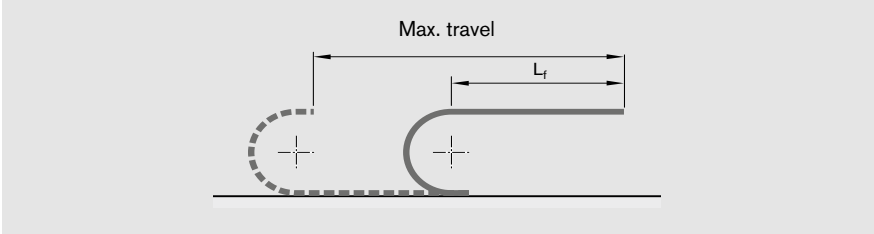

TKL 20-225

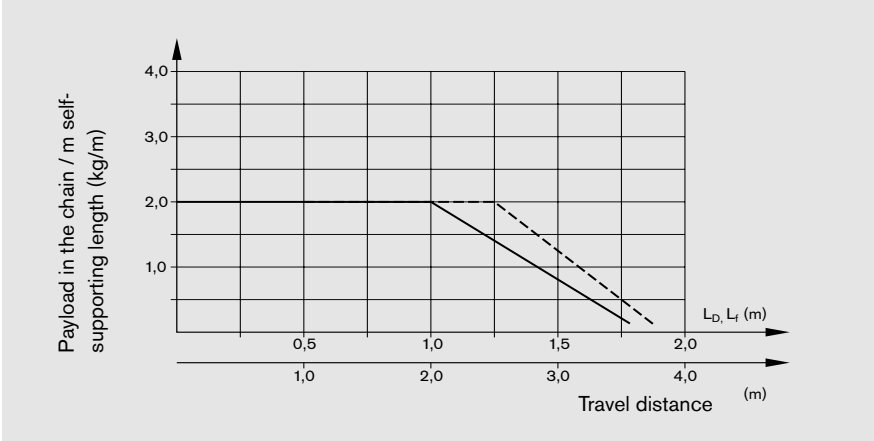

TKL 25-275 / TKL 30-325

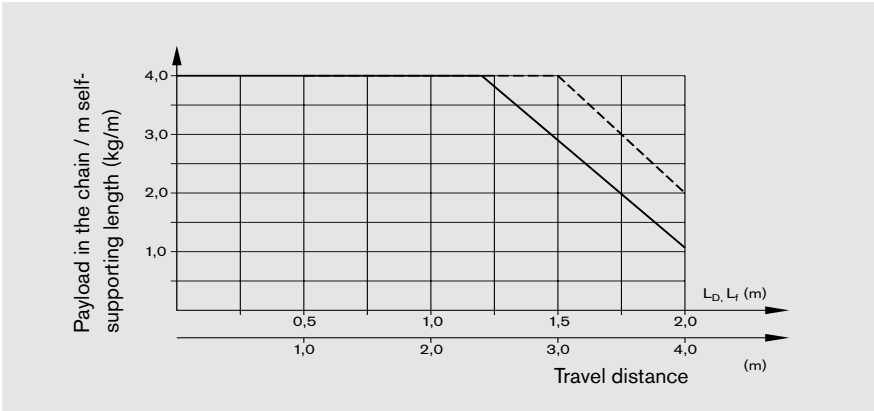

——— L_f = self-supporting length
– – – – L_D = length with permissible sag

Accessories

Water chiller

Standard equipment:
- Environment friendly refrigerant R 407 c
- Refrigerant circuit with TÜV approved high pressure switch with expansion valve
- Low-noise compressor and fan
- Temperature control through digital thermostat
- Water level gauge outside
- Bypass for pump protection
- Up to 42° C ambient temperature
- Protection class at least IP44
- CE compliant / ISO 9001/ EN 60204

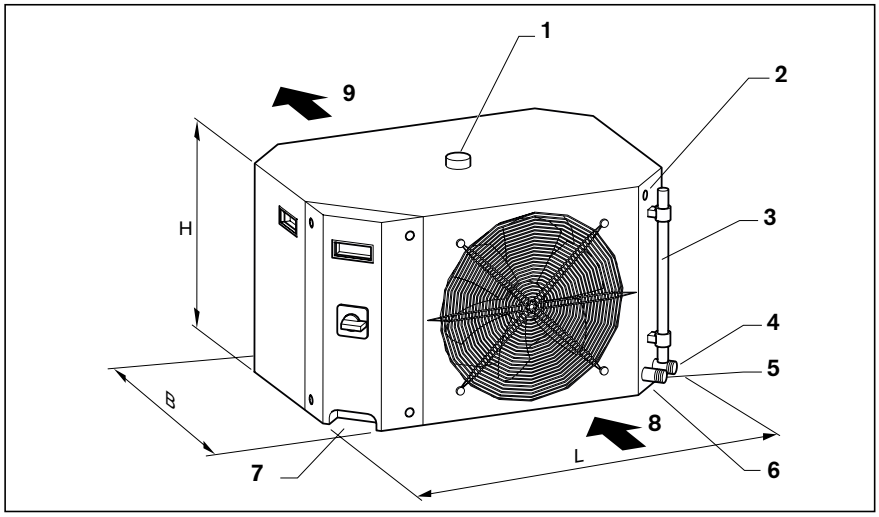

Structural design
1 Manual filling (option)
2 High pressure reset (press to restart)
3 Water level gauge
4 Water outlet
5 Water inlet
6 Access for servicing (by authorized persons only)
7 Power supply
8 Air inlet
9 Air outlet

Dimensions
(L x B x H) 705 x 510 x 450 mm

In temperate climate zones (up to 40° C and 70% relative humidity), the inlet temperature of the coolant can be max. 5 K below the ambient temperature.

Cooling power
A corrosion protection agent (e.g. AQUAPLUS 22 from Petrofer) is recommended; quantity to be added: 1.5 %.

		Part number		
		R3499 335 00	R3499 336 00	R3499 337 00
Refrigerant		Environment friendly refrigerant R 407 c		
Power consumption max.	(kW)	0.71	1.11	1.56
Current max.	(A)	5.1	5.9	10.0
Power supply	(V/PH/Hz)	230/1/50	230/1/50	230/1/50
Air flow rate max.	(m^3/h)	914	1210	1020
Water tank volume	(L)	18	18	18
Pump delivery rate	(L/min.)	2.3	4.3	7.2
Pump pressure P	(bar)	2.2	3.6	2.9
Water connection inlet / outlet	(inch)	3/8	3/8	3/8
Sound pressure at 1 m[1)]	(dB (A))	62.2	63.6	64.8
Net weight without water	(kg)	49	55	65

1) Free-field measurement at 1 m distance

Temperature (°C)		Part number		
Ambient air	Water	R3499 335 00	R3499 336 00	R3499 337 00
		Cooling capacity P_{co}(W)		
32	10	530	920	2100
	15	775	1290	2450
	20/25	1025	1655	2810
37	10	345	675	1645
	15	615	1050	2060
	20/25	890	1425	2475
42	10	250	450	1930
	15	480	765	1810
	20/25	755	1085	2230

Cooling power

The required cooling power is approximately the same as the continuous power loss of the motor.

$$P_{co\ req} = P_{ce} = \left(\frac{F_{eff}}{F_{dN}}\right)^2 \cdot P_{vN} \text{ with } F_{m\ eff} \leq F_{dN}$$

$P_{co\ req}$ = required cooling power (W)
P_{ce} = power loss of motor (W)
$F_{m\ eff}$ = effective force of motor (N)
F_{dN} = continuous rated force of motor (see“Technical Data”) (N)
P_{vN} = rated power loss of motor (W)

TKL	Primary part				Cooling line
	Motor length	Power loss P_{vN} (W)	Required re-frigerant flow Q_{min} (L/min)	Pressure drop of primary part and connections at Q_{min} $\Delta p_{primary\ part}$ (bar)	Pressure drop at Q_{min}. $d_i = 6$ mm Δp_{line} (bar/m)
20-225	A	400	0.57	0.10	0.004
	B	550	0.79	0.15	0.007
25-275	A	780	1.12	0.30	0.013
	B	900	1.29	0.35	0.017
30-325	A	1500	1.29	0.40	0.017
	B	1300	1.87	0.60	0.031
	C	1600	2.30	0.90	0.046

$$\Delta p_h = 0{,}1\,(\text{bar/m}) \cdot \Delta h$$

$$p > \Delta p = \Delta p_p + \Delta p_{pr} + \Delta p_h$$

Δh = height difference between cooler and primary part (m)
Δp_h = pressure drop due to height difference (bar)
Δp_p = pressure drop in the line (bar)
Δp_{pr} = pressure drop in primary part (bar)
p = pump pressure (bar)

Effective motor force $F_{m\ eff}$

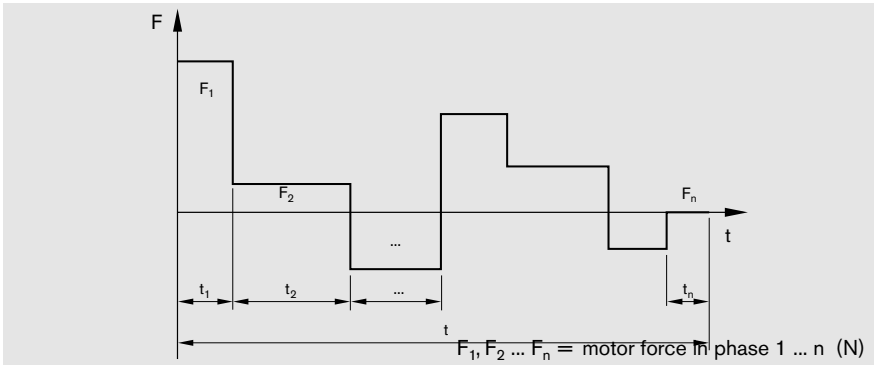

$$F_{m\ eff} = \sqrt{\frac{F_1^2 \cdot t_1 + F_2^2 \cdot t_2 + \ldots + F_n^2 \cdot t_n}{t}}$$

$F_1, F_2 \ldots F_n$ = motor force in phase 1 ... n (N)
$F_{m\ eff}$ = effective force of motor (N)
t = time for all phases (s)
$t_1, t_2 \ldots t_n$ = time for phase 1 ... n (s)

Documentation

Note: The measurements are taken with the unit screwed down and assuming an ideally flat mounting base surface.

Standard report
Option 01

The standard report serves to confirm that the checks listed in the report have been carried out and that the measured values lie within the permissible tolerances.

Checks listed in the standard report:
- functional checks of mechanicalcomponents
- functional checks of electrical components
- design is in accordance with order confirmation

Moment of friction measurement of the complete system (frictional drag)
Option 02
The moment of friction is measured over the entire travel range.

Example

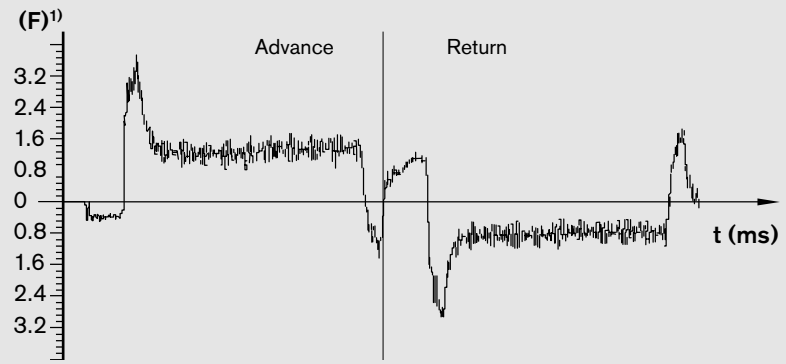

1) In % of F_{dN} = continuous force

Running accuracy
Option 04

Several measuring points are passed during the total travel. The following deviations are determined:

Yawing
Yawing is angular deviation about the vertical axis. This angular deviation is converted to a linear deviation in mm on the basis of a standard length and is plotted on the graph.
The base length is given in the diagram.

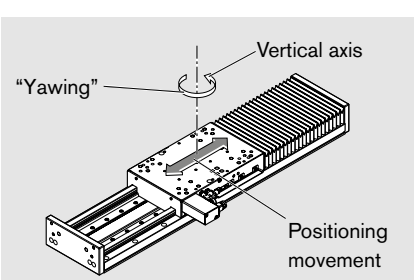

Example Base length 100 mm

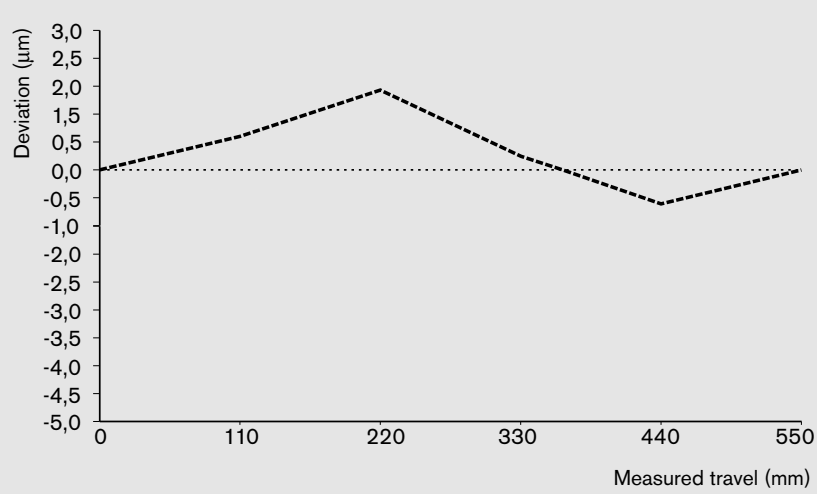

Pitching
Pitching means angular deviation about the horizontal axis. This angular deviation is converted to a linear deviation in mm on the basis of a standard length and is plotted on the graph.
The base length is given in the diagram.

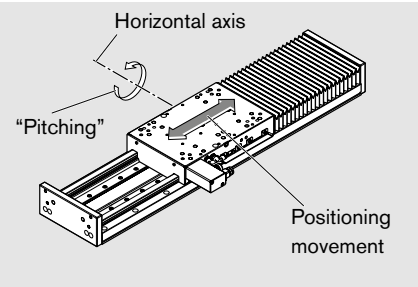

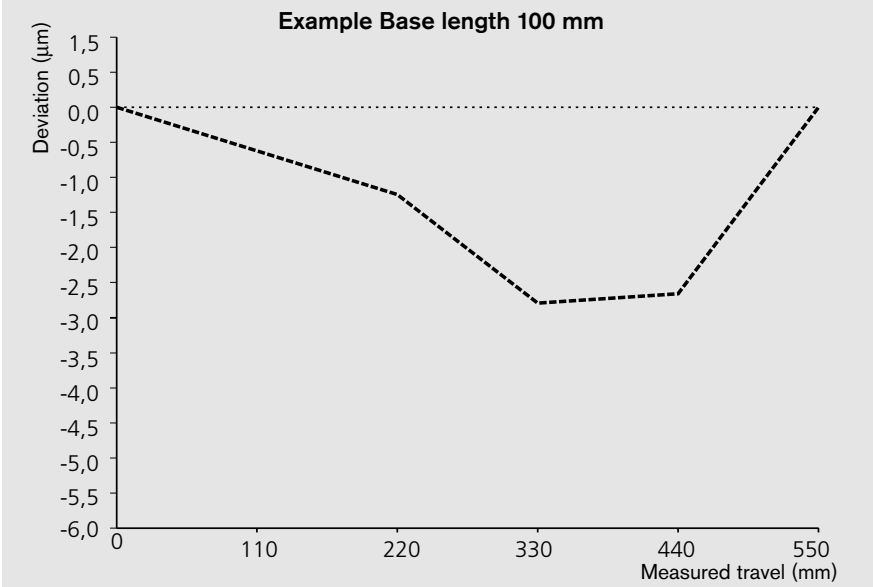

In addition to graphical representation (see illustrations), a measurement report is supplied in table form.

Positioning accuracy to VDI/DGQ 3441 Option 05

Measurement points are selected at irregular intervals along the travel. This enables even periodical deviations to be detected during positioning.
Each measurement point is approached several times from both sides.
This will give the following parameters.

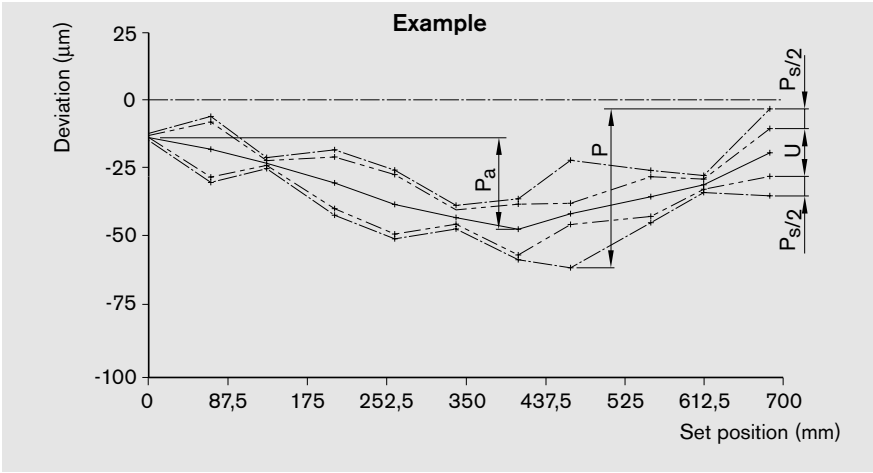

Positioning accuracy P

The positioning accuracy corresponds to the total deviation. It encompasses all the systematic and random deviations during positioning. The positioning accuracy takes the following characteristic values into consideration:
- positioning deviation
- reversal range
- position variation range

Positioning deviation P_a

The positioning deviation corresponds to the maximum difference arising in the mean values of all the measurement points. It describes systematic deviations.

Reversal range U

The reversal range corresponds to the difference in mean values of the two approach directions. The reversal range is determined at every measurement point. It describes systematic deviations.

Position variation range P_S

The position variation range describes the effects of random deviations.
It is determined at every measurement point.

Lubrication

Lubrication notes

⚠ The one-point lubrication of Ball Rail Tables TKL is designed for grease lubrication only!

Basic lubrication is applied in-factory before shipment.
The only maintenance required is re-lubrication of the guideway via the two lube ports (1) using a manual grease gun with extension tube.

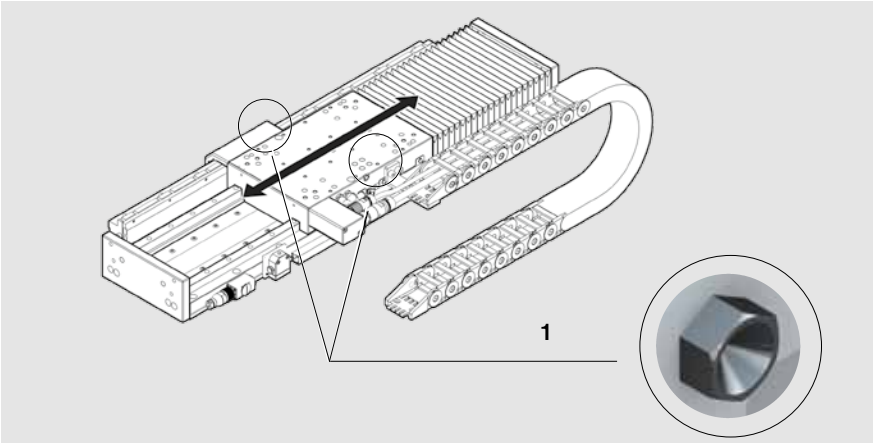

Normal operating conditions

Normal operating conditions	
Ambient temperature	0 °C ... 40 °C
Load	See Technical Data
Travel speed	with High Precision Ball Runner Blocks, max. 5 m/s with High Speed Ball Runner Blocks, max. 6.6 m/s with glass scale (generally) 3 m/s

Order Example

Ordering data							Description
Ball Rail Table		**TKL 20-225**					Ball Rail Table
(Part number): R1450 305 10, 1660 mm							TKL 20-225, length 1660 mm
Type	=	**IM01**					with integrated position measuring system, as shown in diagram IM01
Guideway	=	**01**					Ball Rail Systems
Drive unit	=	**17**					with primary part B with motor winding 250
Carriage	=	**12**					one carriage 400 mm long, standard runner blocks, preload 8%
Cover	=	**01**					with polyurethane bellows
Position measuring system	=	**21**					with integrated position measuring system
End position cushioning	=	**22**					with buffers and clamping unit
1st switch	=	**15**	**-A**	**+**	**400**	**mm**	mechanical switch, external, switch activation point +400 mm
2nd switch	=	**11**	**-A**	**–**	**350**	**mm**	PNP NC, external, switch activation point –350 mm
3rd switch	=	**15**	**-A**	**–**	**400**	**mm**	mechanical switch, external, switch activation point –400 mm
Cable duct	=	**20**			**1500**	**mm**	cable duct 1500 mm long (loose)
Socket/plug	=	**17**					socket/plug (loose)
Switching cam	=	**16**					with external switching cam (for switch activation)
Documentation	=	**01**					with standard report
Cable set (part number) R113000118							Cable set for Ball Rail Table TKL with IndraDrive servo controller. Consisting of power cable and feedback cable
Pre-assembly, motor side	=	**01**					
Pre-assembly, controller side	=	**10**					
Water chiller (part number) R3499 335 00							for temperatures: ambient air 32° C, water 20° C, cooling power 1025 W
Cable drag chain (part number) R3454 030 79							2 sections (m) (For calculations, see “Cable drag chain”)
Assembly kit, mounting accessories (part n.o) R1414 000 23							1 set mounting accessories for cable drag chain

Please check whether the selected combination is a permissible one (load capacities, moments, maximum speeds, motor data, etc.)!

Inquiry/Order Form

Bosch Rexroth AG
Linear Motion and Assembly Technologies
D-97419 Schweinfurt, Germany

Telephone +49-9721-937-0

Telefax +49-9721-937-350
(direct)

Rexroth Ball Rail Tables TKL

To be completed by customer: Inquiry ☐ / Order ☐
Ball Rail Table TKL _____
(Part number): _____-_____-_____, length _____mm

Type	=	☐☐☐☐
Guideway	=	☐☐
Drive unit	=	☐☐
Carriage	=	☐☐
Cover	=	☐☐
Position measuring system	=	☐☐
End cushioning	=	☐☐
1st switch	=	☐☐ – ☐ ○ ☐☐☐☐ mm
2nd switch	=	☐☐ – ☐ ○ ☐☐☐☐ mm
3rd switch	=	☐☐ – ☐ ○ ☐☐☐☐ mm
Cable duct	=	☐☐ – ☐ ○ ☐☐☐☐ mm
Socket/plug	=	☐☐
Switching cam	=	☐☐
Documentation	=	☐☐

Please check whether the selected combination is technically permissible (load capacities, moments, etc.)!

Cable set
Part number: _____-_____-_____

Pre-assembly, motor side	=	☐☐
Pre-assembly, controller side	=	☐☐

Water chiller
Part number: _____-_____-_____

Cable drag chain
Part number: _____-_____-_____
Assembly kit: mounting accessories for cable drag chain
Part number: _____-_____-_____

Quantity _____ pcs, _____ per month, _____ per year, per order, or _____

Notes:

From

Company: _____ Contact: _____

Address: _____ Department: _____

Telephone: _____

Telefax: _____

Rexroth
Bosch Group

Bosch Rexroth AG
Linear Motion and
Assembly Technologies
Ernst-Sachs-Straße 100
97424 Schweinfurt, Germany
Tel. +49 9721 937-0
Fax +49 9721 937-275
www.boschrexroth.com/dcl

Find your local contact person here:
www.boschrexroth.com/addresses-dcl

Subject to technical modifications

Printed in Germany
R310EN 2531 (2010.05)
EN • DCL/MKT